NAUTIQUE

Dear Nautique Owner,

Welcome to the Nautique Family! For more than 100 years, Nautique and Correct Craft have been dedicated to providing our customers and their families with the finest inboard boats available. It's our passion to create the best performing boats in the industry. Boats that allow you to escape the routine of everyday life. Our customers don't just own a Nautique, they live the Nautique life.

Your boat has been built with the best material and workmanship available, a legacy handed down from our founder. Our wealth of experience gives us the edge in innovation, quality and performance. We have the most dedicated and loyal employees in the industry. Hands down. Every day, our employees do more than just punch a clock; they take personal pride in every boat that comes down the line.

Review this Owner's Manual for your boat. We have assembled this manual to inform you about your Nautique and educate you further on boating. Please pay particular attention to the safety statements labeled as **DANGER**, **WARNING**, **CAUTION** and **NOTICE**. These statements alert you to possible safety hazards to avoid so you can have a safer boating experience. There are also many tips and tricks on care and maintenance sprinkled throughout the manual. Boating is very important to us and we would like you to enjoy many years of boating in your Nautique.

By purchasing a Nautique, you have taken the first step in trading your old lifestyle for a new one. Now that you own a Nautique, life as you know it will never be the same.

Enjoy the Nautique Life.

The Nautique Team

"I write these things to you who believe in the name of the Son of God, that you may know that you have eternal life."John 5:13

RECORD IMPORTANT INFORMATION

In addition to this manual, your Nautique boat is supplied with component manufacturer information such as instructions, warranties or other important information. Read these materials carefully since improper operation and maintenance can void the warranty and jeopardize personal safety.

Safeguard information about your Nautique boat, by recording the Hull Identification Number (HIN) and the model of your boat, and the model and serial numbers of your engine/transmission and trailer, if applicable.

Your HIN is located on the top right side of the transom, above the water line. The U.S. Coast Guard requires that your HIN be permanently affixed and remain on the top right side of the transom. The first two digits refer to the country of manufacture (U.S.). The next three digits represent the manufacturer, Nautique Boat Company, Inc. (CTC). The next five digits are the boat's serial number. The next digit is a letter from "A" where "A" = January through "L" where "L" = December, designating the month the boat was made.

The last three digits represent the last digit of the year the boat was built and the final two digits of the boat model year. A boat built in July 2006 is actually a 2007 model boat. Example: A boat with "607" as the last digits indicates the boat was built in 2006, but it is a 2007 model boat.

Hull

HIN _____

Date Purchased _____

Dealer/Phone _____

Ignition Key Number _____

Registration Number/State _____

Engine

Model Number _____

Serial Number _____

Trailer

Model Number _____

Serial Number _____

Accessory

Model Number _____

Serial Number _____

The identification numbers are important! Keep a copy of these numbers stored in a safe place off the boat. In case of theft, damage, etc., report these numbers to the local authorities, your insurance agent and your Nautique dealer.

BOATER'S CHECKLIST

For improved safety and enjoyment, check each of these items:

Check Before You Launch Your Boat:

- Read both the engine and the boat operator manuals.
- Drain plug (Securely in place?)
- Propeller Condition (Prop nut tight and secured, no cracked or bent blades, prop turns freely?)
- Steering System (Working smoothly and properly, self-locking nuts in place?)
- Battery (Fully charged, cable terminals clean and tight?)
- Capacity Plate (Are you overloaded?)
- Weather conditions (Safe to go out?)
- Fuel and Oil (Sufficient for trip, check bilge area for gas odor, no leaks?)
- Hoses and Connectors (No leaks or damage?)
- Navigation lights are in good working order
- Electrical Equipment (Lights, horn, pumps, etc.?)
- Safety Equipment (Fire extinguisher, bailer, paddle, anchor and line, mooring lines, signaling device, tool kit, first aid kit, first aid manual?)
- Personal Flotation Devices for all occupants
- Float Plan submitted to Responsible Person (Verbal or written?)

Check Before You Start Your Engine:

- Fuel (Sufficient for trip, check bilge area for gas odor?)
- Control Lever in Neutral
- Capacity Plate (Are you overloaded?)
- Personal Flotation Devices for all occupants
- Seating (Everyone in proper place?)
- Engine Stop Switch and Lanyard (Operational and securely fastened?)
- No one in water near boat
- Keep firm and continuous grip on steering wheel
- Engine Cooling Water Valve open

RESTRICTED AREAS

Before boating, check with Local, State and Federal authorities to identify restricted areas. Because of the threat of terrorism, the U.S. Coast Guard has and will continue to implement strict limits on watercraft near U.S. Navy and Coast Guard ships and other potential targets.

PROPOSITION 65

⚠ WARNING

A wide variety of components used on this vessel contain or emit chemicals known to the State of California to cause cancer and birth defects and other reproductive harm.

EXAMPLES INCLUDE:
Engine and generator exhaust.
Engine and generator fuel, and other liquids such as coolants and oil, especially used motor oil.
Cooking fuels.
Cleaners, paints and substances used for vessel repair.
Waste materials that result from wear of vessel components.
Lead from battery terminals and from other sources such as ballast or fishing sinkers.

TO AVOID HARM:
Keep away from engine, generator and cooking fuel exhaust fumes.
Wash area thoroughly with soap and water after handling the substances above.

California Health & Safety Code 25249.5-.13

KC-0206-B

EMISSION CONTROL WARRANTY INFORMATION

CORC013

The engine in your Nautique boat meets the strict requirements set forth by the California Air Resources Board (CARB). The engine has a special environmental tag and the boat has this label affixed to it. The tag and the label are required by the California Air Resources Board (CARB). The label has 1, 2, 3 or 4 stars. The label MUST be affixed to the boat, if the boat is operated in the state of California and/or bordering waters.

All Nautique boats built in model year 2027 meet the California EVAP Emissions regulation for spark-ignition marine watercraft. The label shown here will be affixed to the boat near the helm on any Nautique boat manufactured for use in California.

EMISSIONS CONTROL SYSTEM INFORMATION

MEETS 2027 MY CALIFORNIA EVAP EMISSIONS REGULATIONS FOR SPARK-IGNITION MARINE WATERCRAFT

MANUFACTURER: Nautique Boat Company, INC

CALIFORNIA EVAP FAMILY: VNBIPVSSL001
EMISSION CONTROL SYSTEM: CN

CORC1214

BOATING TERMINOLOGY

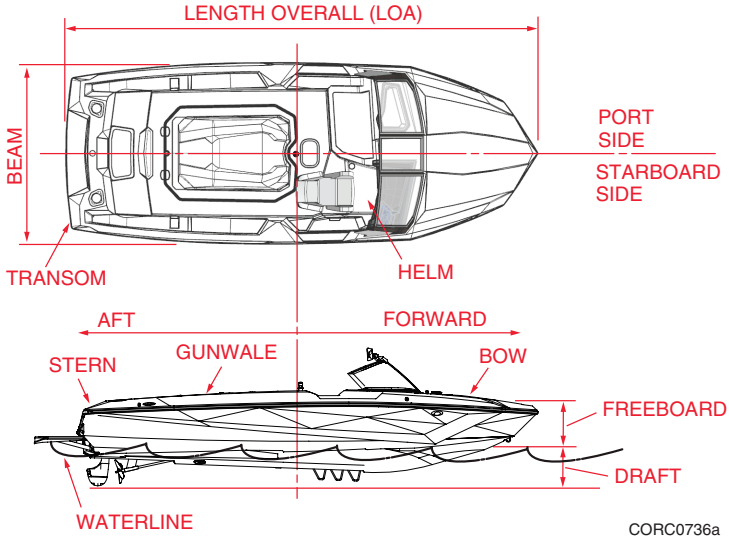

CORC0736a

* An easy way to remember PORT side from STARBOARD side is “PORT” and “LEFT” both have four letters.

PRODUCT IMPROVEMENT

Because of our policy of continuous product improvement, the illustrations used in this manual may not look the same as on your boat and are intended only as representative reference views. Some illustrations may also show optional accessories which may or may not be available for your boat. Many optional accessories can only be installed at the time the boat is manufactured and cannot be installed by your dealer. Your dealer will be happy to provide details on installing accessories.

TABLE OF CONTENTS

Record Important Information ii
Boater's Checklist iii
Restricted Areas iv
Proposition 65 iv
Emission Control Warranty Information iv
Boating Terminology v
Product Improvement v

Boating Safety 1-1
Introduction 1-1
About this Owner's Manual 1-2
Signal Words and Symbols Used in this Manual 1-3
Basic Safety Rules 1-4
Pre-operation Check List - Before Leaving the Dock 1-5
Precautions While Underway 1-7
Safety While Maintaining the Vessel 1-10
Owner Responsibility and Boating Education 1-12
Important Safety Information 1-12
Responsibilities of Boat Owner and Operators 1-12
Registration 1-13
Insurance 1-13
Boating Safety Education Opportunities 1-14
Operation by Minors and Licensing 1-15
Safety and Required Equipment 1-15
Navigation Lights 1-16
Emergency Safety Lanyard 1-16
Life Jackets 1-18
Fire Extinguisher 1-23
Horn or Whistle 1-24
Bilge Pump(s) 1-24
Visual Distress Signals 1-25
Recommended Safety Equipment 1-26
General Boating Safety Topics 1-27
Safe Speed 1-27
Passenger Safety 1-27
Carbon Monoxide Safety 1-28
Proper Loading 1-31
Weighting Your Boat During Watersport Activities 1-32
Visibility from the Helm 1-34
Boating Under the Influence 1-35
Product Misuse 1-36
Reporting Accidents 1-36
Rendering Assistance 1-36
Hazardous Conditions 1-37
Environmental Concerns 1-38
On Product Warning Labels 1-41
Warning Labels & Locations 1-41
Basic Rules of the Road 1-48
Boating Regulations 1-48
Encountering Another Vessel 1-49
Night Running 1-58
Watersports Safety 1-61
Hand Signals 1-63
Towed Person Safety Responsibilities 1-64
Additional Precautions for Towed Skier/Rider 1-65
Tow Line Guidelines 1-67
Fallen Skier or Rider 1-68
Develop WATER SENSE 1-69

Emergency Procedures 1-74
Explosion and Fire 1-74
Swamping and Flooding 1-75
Capsizing 1-76
Staying Afloat 1-76
Collisions 1-76
Grounding 1-77
Person Overboard 1-77
Drowning 1-78
Medical Emergency 1-78
Operation Failure 1-78
Towing 1-78

Ski Nautique 2-1
Specifications 2-1
Ski Nautique Dash Pod and Console 2-3
Ski Nautique Deck Layout 2-4
Seating Area – Ski Nautique 2-6
Standard and Optional Equipment 2-7

Controls and Indicators 3-1
Steering 3-1
Shifter/Throttle 3-3
Emergency Stop Switch 3-4
Helm Instrumentation and Functions 3-6
Control Switches 3-7
12-Volt Port 3-10
Start/Stop Sequence 3-11
Starting Up Your Boat 3-11
Turning Off Your Boat 3-12
Multiple Keyless Ignition Codes 3-13
Fail Safe Mode Procedure 3-13
Using Helm Command in Fail Safe Mode 3-13
Standard Equipment 3-15
Watersports Tow-Point 3-15
Tow Rope Attachment – Center Mounted Pylon 3-16
Tow Rope Attachment – Tower Pylon 3-17
Driver's Seat Adjustment 3-18
Ski Nautique Mirror 3-19
Observer's Seat 3-20
Engine Box Cover 3-21
Fire Suppression System 3-22
Walk-Thru Windshield Opening/Latching 3-23
Dash Storage 3-23
Boarding Platform 3-24
Engine Cooling Water Intake Valve 3-25
Nautique Electrical System 3-26
Rudder Remote Lube 3-26
Fuel Tank 3-27
Optional Equipment 3-28
Ski Nautique Bimini 3-28
Mooring Cover Instructions.... 3-32
Battery Charger 3-34
Optional Accessories 3-35
Stereo Systems 3-35

Boat Systems 4-1
Fuel System 4-1
Ski Nautique 4-2
Bilge System 4-3
Aquatic Invasive Species (AIS) 4-4
Ballast System – Ski Nautique ..4-5
Bilge System – Ski Nautique 4-6
12-Volt System 4-7
Cockpit Heater System – Optional 4-8

Getting Underway 5-1
Safety Checklist 5-1
Safety Equipment 5-2

Fueling 5-2
Gasoline Containing Alcohol.....5-3
Fuel Stabilizer Recommendations for Ethanol Blended Fuels 5-4
When Fueling:.....5-4
After Fueling: 5-5
Boarding 5-5
Boat Planing 5-5
Pre-Operation Checks 5-6
Flooded Engine 5-11
Break-In Procedure 5-13
Propeller Selection 5-13
Shifting 5-14
Steering 5-14
Stopping 5-15
Docking..... 5-15

Running 6-1
Maneuvering Techniques 6-2
Tow Pattern 6-3
Freezing Temperatures 6-4
Anchoring 6-4
Dropping Anchor.....6-5
Weighing (Pulling In) Anchor ...6-5
Performance Boating.....6-6
Propellers 6-6

Care and Maintenance 7-1
General Maintenance 7-1
Engine Intake Raw Water Strainer 7-2
Bilge Pumps 7-4
CE Bilge Discharge Filter 7-4
Cartridge Replacement.....7-5
Propeller 7-6
Removal 7-6
Installation.....7-7
Through-Hull Fittings 7-7
Quick Oil Drain System 7-8
Salt Water Boating 7-9
Proper Use of Fresh Water Flushing Kit.....7-9
Battery Maintenance 7-10
Maintenance-Free Batteries 7-11
Refillable Batteries..... 7-11
Battery Cable Warning Alarm . 7-12
Gelcoat Maintenance 7-13
Care of Metal 7-14
Care of Glass 7-14
Adhesive-Backed Non-Skid Surfaces..... 7-14
Upholstery Cleaning Instructions 7-14
Basic Cleaning 7-14
Extreme Circumstance Cleaning..... 7-15
Tunable Rudder 7-16
Rudder Remote Lube Fitting .. 7-17
Checking Transmission Fluid 7-17

Troubleshooting 8-1
Trouble Check Chart.....8-2
Performance.....8-2

Storage 9-1
Lifting Rings 9-1
Winterizing Your Boat 9-3
Winterizing the Heater System (in Raw Water Cooled Engines Only).....9-4
Check for Water in Your Fuel System 9-5
Winterizing Ballast Tanks (if equipped) 9-6
Trailer/Trailering.....9-7
Hitch 9-7
Wiring 9-7
Security 9-7
Towing Your Boat 9-8

Long Trips 9-9

Glossary.....G-1

Warranty W-1

Nautique Limited Warranty W-1

Lifetime Limited Structural Warranty: W-2

Five (5) Year Limited Boat Warranty: W-2

Gel Coat Three (3) Year Limited Warranty: W-2

Transferable Limited Structural, Boat, Gel Coat Limited Warranties: W-3

Engine/Power Train Warranty:..... W-3

Exceptions: W-3

Exceptions:..... W-3

Procedure:..... W-6

NOTES

NAUTIQUE

Section 1
Boating Safety

INTRODUCTION

Congratulations on your purchase of a new high-performance recreational tow boat. Your Nautique boat has been constructed to meet and/or exceed all U.S. Coast Guard (USCG) and National Marine Manufacturers Association (NMMA) requirements applicable at the time of its manufacture. However, it is still your responsibility as the boat owner to ensure the boat is operated in a safe manner and is properly maintained.

Before operating this vessel, please take the time to get acquainted with the vessel and its various features and controls. We recommend that you carefully read and familiarize yourself with this Owner's Manual and all on-product safety labels prior to operating your new watercraft. This manual contains important information on Boating Safety, Boating Rules and Proper Operation of your boat. In addition, this manual provides a guideline for proper maintenance of your boat and therefore should be considered a permanent part of your vessel. In the event that this boat is sold, this manual should be included along with the boat to ensure that it will provide the same important information to the next owner.

ABOUT THIS OWNER'S MANUAL

The recommended practices and warnings in this manual represent sound advice for recreational boating and identify common risks encountered by boaters engaging in towed watersport activities. Nautique encourages you to read the contents of this manual and familiarize yourself with the safe operation of your new boat. Your Nautique dealer will be able to help you with any information that you wish to have clarified. The manual does not cover all instances of risk or danger, so please use common sense and good judgment when boating. If you follow the advice provided in this manual you will significantly reduce risk to yourself, your passengers, towed participants, and other boaters.

This manual is not intended to be a substitute for taking a course on boating safety nor is it a substitute for boating experience. It is recommended that if you are unfamiliar with the use and operation of a boat you seek advice and training from a qualified individual or organization. Check with your local marine law enforcement agency or dealer for more information about boating safety classes in your area.

The precautions listed in this manual and on the boat are not all-inclusive. If a procedure or method is not specifically recommended, YOU must be satisfied that it is safe for you and your passengers, and that the boat will not be damaged or made unsafe as a result of your decision. Remember – always use caution and common sense when operating and maintaining your boat!

SIGNAL WORDS AND SYMBOLS USED IN THIS MANUAL

Throughout this manual specific precautions and symbols identify safety-related information. You will find **DANGER**, **WARNING**, **CAUTION**, **NOTICE** and **SAFETY INSTRUCTIONS** symbols which require special attention. Please read them carefully and follow these precautions as indicated! They will explain how to avoid hazards that may endanger you, your passengers, towed participants, and other boaters. **PLEASE REVIEW ALL SAFETY INFORMATION.**

⚠ DANGER

DANGER indicates a hazardous situation which, if not avoided, will result in death or serious injury.

⚠ WARNING

WARNING indicates a hazardous situation which, if not avoided, could result in death or serious injury.

⚠ CAUTION

CAUTION indicates a hazardous situation which, if not avoided, could result in minor or moderate injury.

NOTICE

NOTICE is used to address practices not related to physical injury.

SAFETY INSTRUCTIONS

SAFETY INSTRUCTIONS (or equivalent) signs indicate specific safety-related instructions or procedures.

BASIC SAFETY RULES

Make sure you understand all of the operating instructions prior to attempting to operate this boat. Boating-related accidents are generally caused by the operator's failure to follow basic safety rules or written precautions. Most accidents can be avoided if the operator is completely familiar with the boat and its operation, follows recommended practices, and is able to recognize and avoid potentially hazardous situations.

⚠ WARNING

Failure to adhere to these warnings may result in severe injury or death to you and/or others.

Past accident data shows that most FATALITIES involve actions which cause falls or ejections overboard, mishaps with towed persons, propeller strikes, collisions, and carbon monoxide exposure.

Past accident data shows that most INJURIES are associated with collisions, mishaps with towed persons, falls or ejections overboard, being struck by the propeller, and fires and explosions.

These incidents are mostly caused by operator inattention, operator inexperience, reckless operation, alcohol/drug use, excessive speed, passenger or towed person behavior, and violation of navigation rules.

Failure to observe the safety recommendations contained in this manual may result in severe personal injury or death to you or to others.
Use caution and common sense when operating your boat. Don't take unnecessary chances! Basic safety rules are outlined in this section of the manual.

PRE-OPERATION CHECK LIST - BEFORE LEAVING THE DOCK

⚠ WARNING

Failure to follow these precautions may result in severe injury or death to you and/or others.

The operator shall:

- Check that weather conditions are safe for boating. It is the driver's responsibility to determine if weather or other factors have created an unsafe boating environment. Boaters must continuously be aware of weather conditions. Sudden storms, wind, water conditions, lightning, etc., can unexpectedly put boaters in grave danger. Always check the local weather report before going boating.
- Check that drain plugs are securely in place.
- Check that all navigation lights are in working order and have not exceeded the manufacturer's recommended replacement life (25 years from the date the vessel was manufactured).
- Check bilge pump, horn, lights, blower and other equipment to verify they are operating properly.
- Verify that the emergency cutoff switch lanyard is in proper operating condition and is properly affixed to the driver.
- Check the operation of the steering system. Verify that the steering is operational before launching the boat. If the boat is already in the water, verify proper steering wheel operation at low speed. Turn the steering wheel full stop in both directions and verify proper rudder movement. Ensure that there is no binding or stiffness in the steering wheel rotation. Binding and stiffness is an indication that the steering cable needs replacement. Failure of the steering cable will result in loss of control of the boat.
- Ensure that the load of persons, ballast, and equipment is within the limits stated on the USCG Maximum Capacities Plate and is properly distributed based on instructions in this manual.
- Check that all safety equipment and life jackets, personal flotation devices (PFDs), and throwable cushions are in good condition and suitable for your boat and passenger load.

- Inform all passengers where safety equipment is located and how to use it.
- Have at least one other passenger who is capable of operating the boat safely in case of an emergency.

⚠ WARNING

Gasoline vapors can explode. Before starting engine operate blower for 4 minutes and check engine compartment bilge for gasoline vapors.

- It is very important to open the engine cover and check the engine compartment and bilge for liquid gasoline and gasoline vapors prior to each use of your boat and after refueling. Failure to do so may result in fire or explosion as well a serious injury or death to you and/or others.
- If you see liquid gasoline in the engine compartments/bilge or smell gasoline vapors, DO NOT attempt to start the engine. Liquid gasoline in the bilge is an extreme fire and explosion hazard which may cause injury or death. Find and fix the source of the leakage, remove the liquid gasoline from the bilge. Then ventilate the engine compartment/bilge and run the blower to remove all gasoline vapors before starting the engine. If gasoline vapors persist after running the blower, DO NOT attempt to start the engine. Look for a cause and remedy before starting the engine.
- Always operate blower below cruising speed and after stopping the boat.

PRECAUTIONS WHILE UNDERWAY

⚠ DANGER

Failure to follow these precautions will result in serious injury or death.

The operator shall:

- **Check that the area behind the boat is all clear before starting the engine to AVOID PROPELLER INJURY to persons in the water behind the boat or on the swim platform.**
- **Turn off the engine prior to anyone occupying the swim platform or being in the water behind the boat to AVOID PROPELLER INJURY. Being in neutral gear is insufficient; the propeller may still be turning, or engine may be inadvertently shifted into gear.**
- **Not back the boat toward persons in the water behind the boat to AVOID PROPELLER INJURY.**
- **Not allow people to be on or near the swim platform or in the water near or around the swim platform while the engine is running because CARBON MONOXIDE will exist around the back of the boat when the engine is running. Engine exhaust contains carbon monoxide, which is a deadly, odorless, colorless gas.**
- **Not operate the engine in a confined space or while tethered to another vessel as CARBON MONOXIDE will be around the boats.**
- **Not go under the boat cover with the engine running or shortly after the engine has been running because CARBON MONOXIDE may remain under the cover. Remove cover to ventilate the area.**

⚠ WARNING

Failure to follow these precautions may result in severe injury or death to you and/or others.

The operator shall:

- Follow safe operating practices, the “Rules of the Road”, and the Watersports Responsibility Code.
- Not operate a boat if under the influence of alcohol or other drugs.
- Attach the emergency cutoff switch lanyard to his person when operating the boat.
- Maintain a proper course and safe speed at all times to avoid collisions.
- Maintain a lookout for other boats, swimmers and obstructions in the water.
- Operate slowly in congested areas such as marinas and mooring areas.
- Keep a safe distance from other boats, swimmers, personal watercraft, docks, and fixed objects.
- Look before you turn/maneuver the boat so as to avoid potential collisions with oncoming or overtaking vessels.
- Be aware that this boat is a high-performance boat and is capable of quick, tight turns and changes in direction. Familiarize yourself with the handling characteristics of the boat. It is the operator’s responsibility to operate the boat in a manner that ensures the safety of all passengers. Abrupt maneuvers may result in the ejection of unsecured, unseated, or improperly positioned passengers. Verbally warn passengers before making quick, tight turns so they may have time to grasp a handrail, hand-hold, or portion of the boat.
- Be aware that your boat will handle differently depending on loading and on-board weight distribution.
- Ensure that all passengers are properly and securely seated in appropriate seating locations to avoid falling or falling overboard.
- Instruct and ensure that passengers remain properly seated at all times while the boat is in motion above idle speed.
- Not allow passengers to sit on the transom, seat backs, engine cover or sides of the boat while the engine is running and the boat is in motion to avoid falling overboard.
- Not allow passengers to sit in a position that obstructs the operator’s view.
- NEVER leave children unattended and in the boat without adult supervision.

- Have children riding in the bow of the boat be accompanied by an adult in the bow and ensure that all remain seated when the boat is in motion.
- Not let passengers occupy seats which may be in the path of the tow line.
- Slow down when crossing waves or wakes in order to minimize the impact on passengers and the boat. Crossing waves or wakes at an angle (such as 45 degrees) rather than perpendicularly will reduce the severity of the impact. Avoid rough water, large waves and large wakes from other boats when at high speed. Jumping waves/wakes or slamming the bow will cause large vertical impacts which may cause injury to occupants or cause ejections.
- For safe towing (waterskiing, tubing, wakeboarding, wake surfing, knee boarding, etc.) be experienced and have an observer [an observer or "spotter" is required by law in most states]. A rear view mirror is helpful if you are allowed to tow without an observer in your state.
- Avoid letting tow lines or mooring lines wrap around anyone's body parts/limbs. Doing so could allow body parts/limbs to become entangled in the line and could cause significant injury, such as amputations.
- Keep track of tow lines and dock lines so that they do not become entangled in the propeller. A tow line will wrap quickly around a spinning propeller and is capable of immobilizing the boat and dragging a person entangled in the tow line underwater or causing amputations. Shut off the engine if a tow line has potential for wrapping in the propeller.
- The tower is designed to pull a limited number of individual(s), and in some cases only one (1) individual. Please consult the remainder of this manual and warning labels on the tower for details. DO NOT climb, sit on, stand on or jump/dive off of the tower. Tow line may loop on inverted tricks. DO NOT sit behind the pulling point of the tower.
- NEVER allow any type of spark or open flame near gasoline or engine compartment.
- Avoid grounding the boat: be familiar with local conditions and water depth. If you are uncertain, then proceed slowly with caution. Sudden groundings from planing speeds may cause rapid decelerations and cause occupants to impact the boat and/or to be ejected from the boat. Boat damage may also occur.
- Always watch for low obstacles such as tree limbs, bridges or power lines, especially in boats with tow towers.

- Seek shelter from open water if there is threat of lightning or severe weather.
- NEVER dive from the boat without being absolutely sure of the depth of the water. Severe injury or death may occur from striking the bottom or submerged objects. Striking the bottom or a submerged object while diving head first can cause paralysis, head injury or death.
- Provide assistance to other boaters in distress while ensuring the safety of your own passengers.
- When you leave the boat, take the keys with you. This will keep untrained and unauthorized persons from operating the boat. (This may not be applicable on some keyless ignition systems.)

SAFETY WHILE MAINTAINING THE VESSEL

⚠ WARNING

Failure to follow these precautions may result in severe injury or death to you and/or others.

The operator shall:

- Visually inspect the engine compartment and ventilate after refueling.
- Inspect fuel system regularly. Examine fuel tanks, hoses and fittings for leaks or corrosion at least annually because leaking fuel is a fire and explosion hazard.
- Never remove or modify components of the fuel system in any way except for maintenance by qualified personnel. Tampering with fuel components may cause a hazardous condition which could lead to a fire or explosion.
- Never override or modify the engine neutral starting safety switch in any way. Your boat engine should not start in gear. If it does, do not use the boat and have this safety feature fixed by an authorized dealer.
- When charging some batteries, a small amount of hydrogen gas is generated. Hydrogen gas is highly explosive. While charging, it is a good idea to keep sparks, flames and smoking away from the battery. Failure to follow instructions when charging a battery may cause an explosion of the battery.

- Keep the engine off whenever the engine box/cover/hatch is open. The engine box/cover/hatch serves as a machinery guard. Clothing or body parts can get caught in moving parts, causing death or serious injury. Keep away from moving parts.
- Not replace your boat's marine parts with automotive parts or parts that were not designed for your boat.
- Be aware that battery electrolyte fluid is dangerous. It contains sulfuric acid, which is poisonous, corrosive and caustic. If electrolyte fluid is spilled or placed on any part of the human body, immediately flush the area with large amounts of clean water and immediately seek medical attention.
- Check the tightness of the tower bolts BEFORE each use. If a tower collapses it may result in injury to boat occupants or towed persons.
- Not modify the tow pylon. The tow pylon is not designed for vertical extensions. Any modifications to the tow pylon or its mountings may result in damage to the boat and injury to the user.
- Only lift the boat from approved lift points, which are identified in later parts of the manual.

OWNER RESPONSIBILITY AND BOATING EDUCATION

IMPORTANT SAFETY INFORMATION

Your safety, the safety of your passengers, and the safety of other boaters is dependent on how you operate and maintain your boat. As operator or owner of this boat, you are responsible for the safety of those with and around you while boating.

RESPONSIBILITIES OF BOAT OWNER AND OPERATORS

It is the owner's responsibility to ensure that the operator of the boat has been properly instructed in the lawful and safe operation of this vessel. Therefore, before operating the boat, thoroughly read this owner/operator manual. Be sure you understand each item before operating it. Improper operation or trailering of the boat could lead to severe personal injury or death. Improper operation or trailering of the boat may also damage the boat.

The operator and the boat owner assume all risks for themselves, their guests and anyone in proximity to their boat and ensure that all passengers understand the risks and responsibilities associated with boating.

This manual is not intended to provide complete training on all aspects of boat operation. We strongly recommend that all operators of this boat seek additional training on boat handling and safety.

At the time of delivery, the owner/operator is responsible for:

- Understanding the warranty terms and conditions of your boat, your engine, and your trailer.
- Obtaining insurance.
- Examining the boat to ensure the proper operation of all systems.

Before operating the boat, the owner/operator is responsible for:

- Registering the boat as required in the jurisdiction where the boat is being operated.
- Providing the proper (USCG) safety equipment, and checking local, state and federal agencies as to laws and regulations (USCG carriage requirements).
- Carefully reading and understanding safety information and proper operating procedures within this manual.
- Obtaining other boating education if you lack operational experience.
- Familiarizing yourself with the navigable waters where you intend to operate the boat.
- Following the proper break-in procedure for the engine.

REGISTRATION

Federal Law requires that all motorboats be registered and that all motorcraft not documented by the U.S. Coast Guard display registration numbers. In nearly all states, this means registration with the designated state agency. In a few jurisdictions, the Coast Guard retains registration authority. Your dealer will either supply registration forms or tell you where they may be obtained. The agency will supply you with a certificate which must be carried with you when the boat is in operation. International laws may vary as to required registration.

INSURANCE

The boat owner may be legally responsible for damages or injuries caused by both himself and the operator (if different than the owner). Common sense dictates that you carry adequate personal liability and property damage insurance on your boat, just as you would on your automobile. Many states have laws detailing minimum insurance needs. Your insurance agent or your dealer may be able to supply you with more information. You should also protect your boat from physical damage or theft.

BOATING SAFETY EDUCATION OPPORTUNITIES

It is recommended that the boat owner/operator obtain boater safety education. If you have never owned a boat before, you can get an excellent introduction to boat handling from organizations such as the U.S. Coast Guard, American Red Cross, United States Coast Guard Auxiliary, or your local boating authority. Even if you are a veteran boater, these courses will help sharpen your boating skills as well as bring you up to date on current rules and regulations. See your local boating agency or dealer for information on classes in your area.

Some states require youths, 16 years of age and younger, to complete a boating safety course before operating any watercraft. Many others require operators under the age of 18 to be licensed in small boat operation.

Boat smart from the start: take a boating safety course and get a free vessel safety check annually for your boat. For more information, contact: United States Coast Guard Auxiliary, www.cgaux.org; United States Power Squadrons, 1-888-FOR-USPS, www.usps.org.

The following is a list of some other agencies and organizations that offer Water Safety, First Aid and CPR courses or information. To find boating safety courses in your area, call your state's local boating agency or the BoatUS Courseline at www.boatus.com/courseline.

- USCG Office of Boating (www.uscgboating.org)
- American Red Cross (www.redcross.org)
- U.S. Coast Guard Auxiliary (www.cgaux.org)
- U.S. Power Squadrons (www.usps.org)
- State Boating Offices
- Canadian Power and Sail Squadrons (www.cps-ecp.ca)
- Boat Owners Association of the United States (www.boatus.com)
- National Safe Boating Council (www.safeboatingcouncil.org)
- Water Sports Industry Association (www.wsia.net)
- European or international organizations

OPERATION BY MINORS AND LICENSING

If your boat will be operated by a minor, remember to have an adult present at all times. Many states have laws regarding minimum age and licensing requirements for minors. Some states require boat training courses, certification, or licensing for minors and/or adults. Contact state and local authorities for requirements that apply in your area.

SAFETY AND REQUIRED EQUIPMENT

Your boat and equipment must be in compliance with federal, state and local safety equipment regulations. USCG regulations require certain safety equipment be present on your boat during operation. For a detailed description, obtain "A Boater's Guide to the Federal Requirements for Recreational Boats" published by the U.S. Coast Guard and available online at: https://uscgboating.org/regulations/federal-regulations.php.

In addition to the USCG regulations, other local and/or international law enforcement agencies may have similar requirements. You should check with your local marine law enforcement agency regarding any such requirements before boating.

Equipment requirements for coastal and inland waters differ. Check with local authorities and/or the USCG for further information about coastal water requirements.

The Federal Boat Safety Act of 1971 (FBSA/71) and the National Recreation Boating Safety Program have established minimum safety standards for boats and associated equipment, specified by the USCG. In addition, the American Boat and Yacht Council (ABYC) and the National Marine Manufacturers Association (NMMA) work with boat builders to develop voluntary standards that exceed the USCG requirements. The included safety equipment on your boat meets or exceeds the standards of the USCG, ABYC and the NMMA.

Some required safety equipment, such as life jackets (PFDs), are not included with your boat. Your dealer can help you choose the appropriate equipment.

NOTICE
Many states' equipment requirements go beyond USCG requirements. Contact your state boating office for further information.

NAVIGATION LIGHTS

NOTICE

The navigation lights installed on your Nautique have an expected lifespan of 25 years from the date the boat was manufactured. Even if the lights are still working, Nautique recommends having them replaced, upon reaching the 25-year date, by a Nautique Dealership using compatible replacement parts.

Your boat is equipped with navigational lights. Recreational boats are required to display navigational lights between sunset and sunrise and other periods of reduced visibility (fog, rain, haze, etc.). Navigation lights are provided to keep other boats informed of your presence and course. It is up to you to make sure they are operational, displayed correctly, and turned on when required.

EMERGENCY SAFETY LANYARD

Your boat is equipped with an Emergency Safety Lanyard (cutoff switch). We recommend that the lanyard be secured to the operator and the lock plate attached to the emergency cutoff switch prior to starting the engine and anytime the engine is operating. The Emergency Safety Lanyard is designed to turn off the engine whenever the operator moves far enough away from the helm to activate the switch. The purpose is to stop the engine, propeller, and boat in the event the operator leaves the helm location, falls overboard, or is ejected from the boat. If the engine is stopped it will prevent the boat from becoming a runaway, unmanned boat, which may cause injury or death to boat occupants who have fallen overboard or been ejected, or to other nearby people. If the engine stops it will minimize the subsequent opportunity for propeller contact with the operator or other persons in the water. If the engine and boat stop it will afford opportunity for the operator or other persons who have fallen overboard to safely re-board the boat.

⚠ WARNING

It is recommended that you use the Emergency Safety Lanyard system as failure to do so can cause death or serious injury.

DO NOT operate the boat if the Emergency Safety Lanyard system does not function properly.

- Attach the Emergency Safety Lanyard to a secure place on your clothing, your arm or your leg while operating.
- DO NOT attach the lanyard to clothing that could tear loose.
- DO NOT route the lanyard where it could become entangled, preventing it from functioning.
- Avoid accidentally pulling the lanyard during normal operation.
- Loss of engine power means loss of most steering control.
- Without engine power, the boat will decelerate rapidly. This could cause people in the boat to be thrown forward or ejected overboard if they are not properly seated in the boat.
- Instruct others on how to start the boat if you as an operator are thrown overboard. Consider having an extra lanyard readily available on board since the system cannot be overridden without the lanyard that is on the person who is now overboard.

Effective April 1, 2021, individuals operating most types of powered boats less than 26 feet (7.9 meters) in federal waters are required to use an emergency safety lanyard while the boat is on plane or above displacement speed. Individual states may also require the use of the emergency safety lanyard by law. Check with local and state authorities about usage requirements to avoid potential fines.

There are practical limitations to what the Emergency Safety Lanyard can do. It can take several seconds for the engine and propeller to stop turning. The boat can continue to coast for several hundred feet depending on the boat speed at the time the switch is activated. While the boat is coasting, it can cause injury to anyone in its path. Accidental loss of power can be hazardous particularly when docking or in heavy seas, strong current, or high winds.

While at the dock or when the boat is not moving, periodically disconnect/pull the Emergency Safety Lanyard out of the switch while the engine is running to test for proper operation. The engine should shut off when the lanyard is disconnected/pulled from the switch. You should not be able to restart the engine until the lanyard is back in place.

LIFE JACKETS

Federal law requires that you have at least one wearable life jacket of the proper size, for each person on board or being towed, and at least one throwable Personal Flotation Device (PFD) in the boat. A life jacket must be Coast Guard approved, in good and serviceable condition and the appropriate size for the user. To meet requirements, each lifesaving device must have a current, legible USCG approval stamp permanently affixed. At the beginning of each season, inspect life jackets (PFDs) for damage and test for proper flotation. Refer to the lifejacket (PFD) manufacturer's information.

REMEMBER – The best life jacket is the one that is worn – that is, the one that can save your life. Life jackets are intended to save lives; it is highly recommended that you and your passengers wear them while in the boat. Learn how to use them and adjust as necessary for comfort. It is especially important that children and non-swimmers wear a life jacket (PFD) at all times. Make certain all passengers know where life jackets are located, how to put on and properly adjust their life jackets (PFDs), and that life jackets are readily accessible at all times.

Your dealer can help you select appropriate life jackets and throwable lifesaving devices for your area. Some life jackets are specially made for use while waterskiing or wakeboarding and are not U.S.C.G. approved. Please check local law with respect to their use. Some states require children to wear a life jacket at all times.

Starting in 2020, the U.S. Coast Guard working in cooperation with Transport Canada started transitioning to new life jacket labeling based on a performance classification system acceptable in both countries. If you have older approved life jackets, devices are approved in one country or the other, but not both. U.S.-approved devices are still acceptable in the U.S., and Canadian-approved devices are still acceptable in Canada when used in accordance with the approval label.

Always check and read the manufacturer's information booklet and label provided with all new life jackets. They will provide valuable information, including size, type, intended use, approval, inspection, and care information. For more information, go to http://wearitlifejacket.com/.

Things to Know about Life Jackets:

- Life jackets are now classified as wearable or throwable on the label.
- We recommend that all boaters and passengers wear a life jacket at all times while boating.
- Certain life jackets are designed to keep the head above water and help you remain in a position that permits proper breathing.
- To meet USCG requirements, a boat must have an approved life jacket for each person aboard. Boats 16 feet (4.9 meters) and over must have at least one throwable device as well.
- All states have regulations regarding children wearing life jackets. Special life jackets for children are available and based on the weight of the child.
- Adult-sized life jackets will not work for children. To work correctly, a life jacket must be worn, fit snugly and not allow the child's chin or ears to slip through.
- Test life jackets for wear and buoyancy at least once each year. Discard waterlogged, faded, leaky or damaged jackets.
- Properly stow life jackets but make them easily accessible.
- A life jacket, especially a snug-fitting flotation coat or deck-suit style jacket, can help people survive in cold water.
- Various types of life jackets are also available for pets.
- A life jacket can save a boater's life, but only if the boater wears it. Set the example and wear it whenever near the water.

Life Jackets Must Be:

- New jackets must be USCG or Transport Canada approved
- In good and serviceable condition
- Appropriately sized for the intended user
- Appropriate for the water activity
- Snug-fitting
- The best life jacket is the one you will wear

Accessibility

- Throwable devices must be immediately available for use in emergency situations.
- Wearable life jackets must be readily accessible.
- Boaters must be able to locate and put them on in a reasonable amount of time in an emergency.
- They should not be stowed in plastic bags, in locked or closed compartments, or have other gear stowed on top of them.

Child Life Jacket Federal Requirements

No person may operate a recreational boat underway with any child under 13 years old aboard unless each such child is either: (1) Wearing an appropriate PFD approved by the Coast Guard; or (2) Below decks or in an enclosed cabin.

SCAN ME VIDEO

KCB-0130

Some states require that children wear life jackets at all times; check with the state boating safety authorities.

Since children grow quickly, many boat launches now feature free use of children's life jackets in several different weight categories.

Life Jacket Requirements for Certain Boating Activities Under State Laws

The USCG recommends, and many states require, wearing USCG-approved life jackets:

- For waterskiing and other towed/surf activities, use a life jacket designed for waterskiing. It is illegal in many states to participate in towed water sports without a USCG-approved life jacket. Be aware that some specialized water sports vests are NOT USCG-approved and should be worn in addition to a USCG-approved life jacket.
- While operating personal watercraft (PWC) use a life jacket marked for PWC or waterskiing use.

Check with the state boating safety authorities. Other rules may apply if boating in an area under the jurisdiction of the Army Corps of Engineers or a federal, state or local park authority. Special local rules are usually posted at the boat launch.

The new life jacket labels make it easier for the boat owner to choose the appropriate sizes and types of jackets for the boat. Labels may be in English, French Canadian or both languages depending on where they are marketed, but all will use icons for key performance indicators.

Size

Chest size is used on ADULT devices to further define the fit not used on all others. Weight is used to define the basic size groups of:

- INFANT <30 LBS
- CHILD 30-50 LBS
- YOUTH 50-90 LBS
- ADULT >90 LBS

Performance Level

The performance level indicates the amount of floatation provided. The higher the number, the more floatation at the increase in bulk.

- Lower numbers are more comfortable to wear and are a good choice for near-shore, calm water boating.
- Mid numbers offer more stability for people who do not swim and for novice swimmers and are a better choice for coastal boating.
- Higher numbers have the greatest floatation and are the best choice for remote areas where rescue times may be long, for non-swimmers, and for offshore use.

Turnability

Typically, jackets with low performance levels will not turn an unconscious person face-up. Jackets with mid performance levels may not turn an unconscious person face-up. Jackets with high performance levels will turn an unconscious person face-up.

Warnings

Some life jackets are not approved for waterskiing, tubing, wakeboarding, white-water paddling, or use on a personal watercraft.

Find More Information

Additional information on the life jacket in the owner's manual and web sources.

Manufacturer and Approval Information

Manufacturer's information for possible future recalls. USCG approval number and certification agency to assure the jacket meets the law and is safe to use.

Use, Care and Storage Information

A summary of the use, care and storage information contained in the owner's manual.

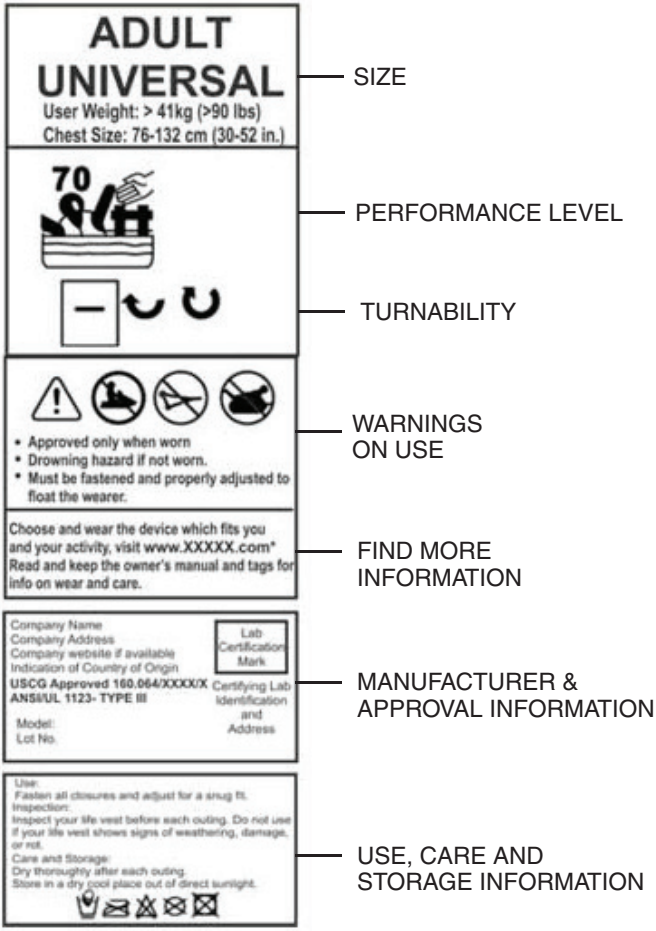

KCB-0129

Inflatable Life Jackets

U.S. Coast Guard-approved inflatable life jackets are authorized for use by persons 16 years of age and older (check the label).

- They require regular maintenance. Also, pay attention to the condition of the inflator.
- They must have a full cylinder and all status indicators on the inflator must be green. If all status indicators are not green, the device is not serviceable and does not satisfy the legal requirements for the wearable life jacket carriage requirement.
- They must be worn at all times.

FIRE EXTINGUISHER

A portable fire extinguisher is required if your boat has an inboard engine, or when fuel is stored in closed stowage compartments.

Approved fire extinguishers are classified by a letter symbol, either 5-B or 20-B with the B designating that the material will extinguish flammable liquids such as gasoline, oil, etc.

At least one 5-B, 10-B or 20-B extinguisher is required for boats less than 26 feet in length. Check periodically to ensure that the extinguisher is in working condition and fully charged. Check local, state and federal agencies as to laws and regulations.

HORN OR WHISTLE

All boats over 16 feet (4.8 meters) in length must be equipped with an operable horn or whistle. Test the operation of the horn periodically, so as to make sure it will sound when you actually need to alert someone or another boat. The following are standard signals when using a whistle or a horn:

- One prolonged blast: Warning.
- One short blast: Pass on my port (left) side.
- Two short blasts: Pass on my starboard (right) side.
- Three short blasts: My engines are in reverse.
- Five or more blasts: Danger!

BILGE PUMP(S)

Bilge pump(s) are installed in your boat to remove water that may accumulate in the bilge. Know the location of the pump(s), where they discharge, and where switches are located. Typically there are manual switch and/or an automatic switch position(s). Periodically test the operation of bilge pumps by activating the manual switch and observing the water discharge. It is best to leave the bilge pump switches in automatic mode, so as to not allow excess water to unknowingly accumulate in the bilge of your boat. If your bilge pump comes on too frequently or continuously, investigate the source of leaking water (check for hull damage, hose or piping leaks, missing drain plug, exhaust system or ballast system failures, etc.), and/or return to shore. Excess water in the bilge of your boat can cause loss of engine power, sinking, and/or capsizing.

VISUAL DISTRESS SIGNALS

All vessels used on coastal waters, the Great Lakes, territorial seas, and those waters connected directly to them up to a point where a body of water is greater than two miles wide, must be equipped with USCG approved visual distress signals. Your dealer or local authorities can help you select appropriate visual distress signals for your area.

If you are required to carry distress signals, you must have three USCG approved pyrotechnic devices. Be sure they are in serviceable condition, not exceeding the expiration date and stored in a cool, dry location in a red or orange waterproof container.

⚠ WARNING

Pyrotechnic signaling devices can cause fire and/or explosion, death, serious injury, and property damage if improperly handled. Follow the pyrotechnic manufacturer's directions.

RECOMMENDED SAFETY EQUIPMENT

As a precaution, a prudent boater will avoid potential problems on an outing by having additional equipment on board. Normally, this equipment is dependent on the size and type of the body of water and the length of the trip. Your dealer can assist you in acquiring this additional equipment.

We recommend the following equipment:

- First aid kit and manual
- Anchor with at least 75 feet (23 meters) of line
- Mooring lines and fenders
- Bailing device (bucket, hand pump)
- Combination paddle/boat hook
- Local charts and compass
- Day/night distress signals
- Waterproof flashlight and spare batteries
- Cellular phone
- Waterproof container for cell phone
- GPS Global Positioning System
- Binoculars
- Portable AM/FM radio with weather band
- A non-electric horn or whistle
- Extra engine oil
- Tool kit
- Spare propeller and mounting hardware
- Spare fuses
- Spare keys
- Sunglasses and sun block lotion

GENERAL BOATING SAFETY TOPICS

SAFE SPEED

Navigation rules state that a boat be operated at a safe speed at all times. Determination of a safe speed involves consideration of many factors, such as, but not limited to:

- Boating activity (tubing, water skiing, wakeboarding, wake surfing, etc.)
- Boat traffic congestion
- Water conditions
- Environmental conditions (shore line, docks, and depth of water)
- Weather
- Visibility

The boat should not be driven at a rate of speed faster than will allow it to be brought to a full stop within the operator's field of view given the environmental conditions at the time. Safe speed for the conditions and driver attention (lookout) are important factors in avoiding collisions which may cause injury or death. When in doubt it is prudent to slow down within adequate time and distance so as to be able to assess the conditions and paths of other boats.

It is important to know the Rules of the Road, although do not assume that all boaters also know the rules or that they will abide by them. Avoid collisions by constantly assessing the ever-changing situation and be sure to make appropriate speed and course changes early.

PASSENGER SAFETY

The operator of the boat is responsible for the safety of the passengers, all skiers/riders, as well as his/her own safety. Ensure that you and your passengers adhere to these safety recommendations:

- Any time you take your boat out, make sure that there is at least one other passenger aboard who is familiar with the operation of your boat.
- Ensure that all passengers are properly and securely seated in appropriate seating locations to avoid falling or falling overboard.
- While the engine is running, and while the boat maneuvering, all occupants should be properly seated. DO NOT stand while the boat is moving.

- DO NOT sit on the engine box, seat backs, transom seating, sunpad, boarding platform or gunnels while the boat is underway. You could fall overboard and be hit by the propeller, or another boat.
- DO NOT allow objects, arms or legs, or any other body parts to hang over the bow or gunnels. Stay within the boat.
- Passengers should not sit in locations that obstruct the operator's visibility.
- Persons and gear should be stowed in a way that distributes weight appropriately and in a manner that trims the boat properly (pitch angle). Excessive weight at either the bow or the stern relative to one another can cause trim problems leading to reduced driver visibility, erratic steering, loss of control, or bow submergence and flooding/swamping.
- Passengers should be well aware of emergency equipment and instructed in its use.
- Passengers should assist with lookout duties and notify the operator of any approaching watercraft or potentially unsafe conditions to provide assistance with collision avoidance.

CARBON MONOXIDE SAFETY

Carbon Monoxide (CO) is a deadly, colorless and odorless gas produced by all engines and fuel burning appliances. Even with the best boat design and construction, plus the utmost care in inspection, operation and maintenance, hazardous levels of carbon monoxide may be present in or near the boat under certain conditions. Even catalyst equipped boats still generate carbon monoxide. The boat owner, operator, as well as all boat occupants, must understand the dangers of carbon monoxide and must comply with all safety recommendations/requirements. For boats with cabins, always ventilate the boat interior and avoid boating situations which cause increased exposure.

⚠ DANGER

CARBON MONOXIDE (CO) CAN CAUSE BRAIN DAMAGE OR DEATH.

Engine exhaust contains odorless and colorless carbon monoxide gas.

Carbon monoxide will be around the back of the boat when engines or generators are running.

MOVE TO FRESH AIR if you feel nausea, headache, dizziness, or drowsiness.

- Do not allow people to be on or near the swim platform or in the water near the swim platform while the engine is running. Carbon monoxide will exist around the back of the boat when engines are running.
- Do not operate the engine in a confined space or while the boat is tethered to another vessel.
- Do not go under the boat cover while the engine is running or shortly after the engine has been running. Carbon monoxide may be trapped under the cover. It is important to remove the cover and/or ventilate the area before going under the boat cover.
- Do not drag behind the boat while holding onto swim platform (sometimes referred to as “Teak surfing”). Carbon monoxide will exist in high concentrations in the vicinity of the swim platform near the water while the engine is running. The USCG has deemed platform dragging as a dangerous and hazardous activity which should be prohibited, as it can result in injury or death.
- In the event that someone exhibits the symptoms of carbon monoxide exposure (nausea, headache, dizziness, or drowsiness), have them breathe fresh air and, if necessary, immediately seek medical attention.

Hazardous boating situations involving carbon monoxide include:

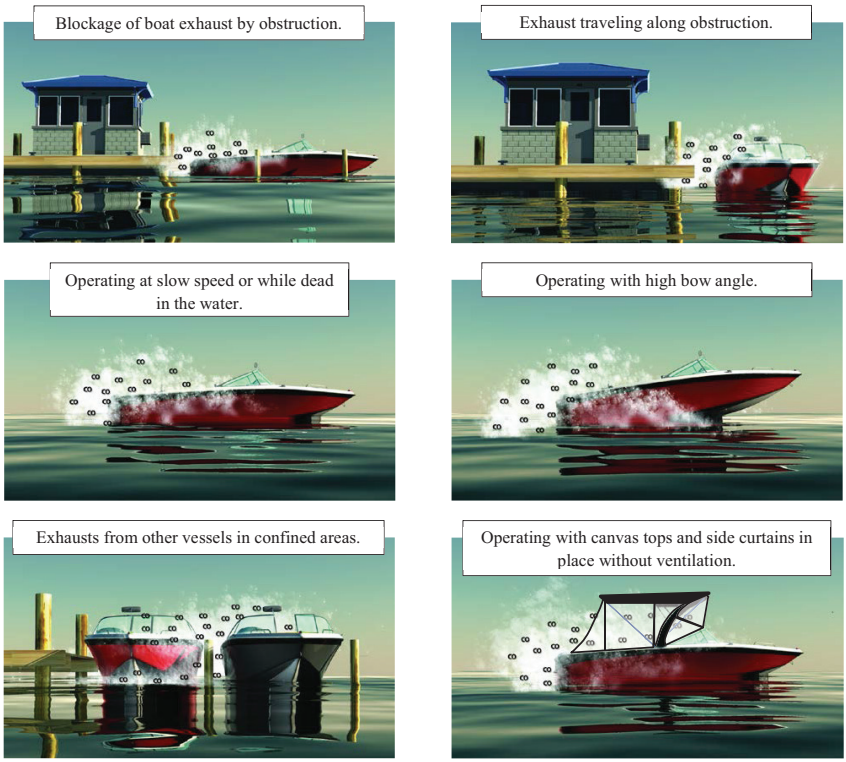

CORC1138

For the most current information on carbon monoxide, you may call, write or visit on-line any of the following:

United States Coast Guard
Boating Safety Division (CG-5422)
2100 Second Street SW STOP 7581,
Washington, DC 20593-7581
www.uscgboating.org
(www.uscgboating.org/recreational-boaters/carbon-monoxide.php)

NMMA
National Marine Manufacturers Association
231 S. LaSalle St., Suite 2050, Chicago, IL 60604
312-946-6200 *www.nmma.org*

American Boat & Yacht Council, Inc.
613 Third St., Suite 10, Annapolis, MD 21403
410-990-4460 *www.abycinc.org*

PROPER LOADING

⚠ WARNING

DO NOT overload your boat.

Overloading or uneven loading can cause loss of control, capsizing, or swamping, which may lead to death or serious injury.

Adhere to the load capacity plate restrictions, and always account for persons, gear, and all non-factory installed ballast or other equipment.

Your boat is equipped with a maximum load capacity plate indicating the maximum acceptable load as determined by the manufacturer following certain Federal guidelines. In addition to following these weight guidelines, it is critical that you properly distribute this weight throughout the boat. If too much weight is placed in one area it can have serious impact on the boat's handling and control, which has the potential to lead to injury or death.

The load capacity plate is used by boat manufacturers participating in the National Marine Manufacturers Association certification program. Your manufacturer has submitted your model for inspection and compliance with their guidelines. The maximum number of persons allowed on the boat has been determined by the manufacturer and displayed on the capacity plate. This information on the capacity plate applies under normal conditions and special care must be used in any abnormal conditions. Check the capacity plate on your boat and abide by these limits.

The capacity plate has the following information permanently printed on it:

The total weight of persons, gear and other items which the boat is capable of carrying under normal conditions. **This weight must include any added ballast above and beyond boat manufacturer's factory installed ballast system(s).**

⚠ WARNING

Any non-factory installed ballast must be properly secured to prevent injury.

⚠ WARNING

Do not fill the bilge area with water. Excessive water in the bilge can cause changes in the boat trim and reduce boat stability which may lead to submergence or capsize.

WEIGHTING YOUR BOAT DURING WATERSPORT ACTIVITIES

Although water intrusion and waves spilling inside a boat is an obvious boating hazard, this hazard can be increased when weighting your boat for water sports such as wakeboarding or wakesurfing. As wakeboarding has evolved, ballast systems have been developed to add weight and increase the size of the wake. The simplest ballast system on the market is the water ballast type, such as the “FAT SAC.” The quest for the largest wake has caused some boat operators to excessively overload their boats. It is not uncommon to see operators use aftermarket ballast systems and then put additional people and gear in their boat. Be advised that this practice can lead to overloading your boat which may lead to any of the following: changes in handling and performance; capsizing, flooding, and sinking; boat occupants going overboard. **Do not overload your boat.**

Always be aware of the load in your boat and do not load the boat in excess of the listed capacity. Each boat has a maximum capacity label displaying the maximum weight of people, gear and ballast that can be placed in the boat. Always have your passengers in designated occupant positions when underway.

When loading your boat, give attention to the effect that the load distribution has on the boat’s trim angle. Trim angle is the technical term for the up or down pitch angle of your boat (also known as the “bow up” or “bow down” angle). The fore and aft load distribution of weight, passenger, and gear can affect the running trim angle of the boat.

- Excessive weight placed in the stern of the boat can cause the inability to get on plane, high bow up angles, and can lead to steering difficulties. High bow up angles can be dangerous due to the reduction in the operator's forward visibility which can lead to collisions and groundings. High bow up angles cause longer transition times from displacement mode (slow velocity, 0 to 5 mph) to planing speeds (18 to 20 mph and above). During transition, it is important that the boat operator pays attention so that they are able to see forward and that the time in transition (or in the "hump" speed region) is minimized.
- Excessive weight placed in the bow of the boat can lead to very flat planing trim angles which may lead the boat to turn aggressively, unpredictably, and without steer input. The phenomenon of yaw instability is caused by heavy bow weights and running very flat(bow down or flat trim angles). This can occur with excessive weight in the bow compared to weight in the stern of the boat. Another ill effect of too much bow weight in comparison to stern weight is that with extremely heavy bow loads, the boat's bow may dive or submerge when coming off plane (decelerating rapidly, or encountering waves/wakes at slow speed). If the bow submerges, then water will enter and flood your boat.
    - When encountering conditions which may lead to bow diving or bow submergence, it is recommended to accelerate the boat before the wave/wake in order to help raise the bow and get over the wave/wake.
    - If the bow submerges, the recommended action is to reduce throttle to stop forward speed, get passengers to move aft, and turn on the bilge pump.

It is the boat operator's responsibility to tell passengers to move to other seats on the boat, so as to not overload the stern or bow of the boat, nor restrict the boat operator's forward visibility. There is no single recommended seating or load distribution for all conditions. Experience with your boat will allow you to determine where to properly allow passengers and gear to be placed.

⚠ WARNING

Excess and improper loading of bow area forward of windshield may cause water influx, operating instability, and loss of control resulting in injury or death.

Bow Capacity Limit – X persons or XXX lbs. person, gear and ballast (varies by model). This is posted separately on your boat but still included in overall capacity.

Use good judgment when weighting your boat for any towed water sports.

VISIBILITY FROM THE HELM

The operator of the boat is responsible, by law, to "maintain a proper lookout by sight and hearing." The operator must ensure that he/she has appropriate visibility for safe operation. No passengers or equipment should block the operator's view, including the view of other boats, skier(s), rider(s), swimmer(s), or anyone or anything else in the water. Even momentary interference can result in the driver's inability to respond to a situation that requires avoidance of another vessel or submerged or partially-submerged object(s).

Look carefully before turning, especially when you are turning around to pick up a fallen skier/rider. Other boats in your vicinity may not necessarily be following the "Rules of the Road." Be alert and keep a visual check for other boats in and around your intended path. Do not turn or maneuver your boat without first checking that it is clear to do so. Failure to look before turning can result in an encounter with another boat where neither boat has enough time to avoid a collision. This situation can develop very quickly if you fail to look first and turn in front of another oncoming boat.

⚠ WARNING

Obstructed visibility can cause death or serious injury. The operator must maintain clear visibility at all times while operating the boat.

Arrange passengers and equipment appropriately or designate a passenger to assist when visibility is limited.

BOATING UNDER THE INFLUENCE

⚠ WARNING

Operating boat or boating under the influence of alcohol and/or drugs can cause serious injury or death.

Alcohol and drugs slow your reaction time and impair your judgment.

Do not operate a boat or allow passengers to boat while under the influence of alcohol and/or drugs.

Boating under the influence of alcohol or drugs can be deadly. Alcohol and/or drug use is the leading contributing factor to all recreational boating fatalities. Alcohol and drugs can increase your reaction time and impair your judgment. Combined with the sun, wind, waves, and noise of other watercraft, the effects of drugs and alcohol can be increased and can significantly increase your reaction time. As the owner/operator, you are responsible for the alcohol/drug use and onboard behavior of your passengers. Additionally, civil lawsuits in cases of property damage or injury/death to others can result in significantly higher verdicts when alcohol or drugs are allowed.

⚠ WARNING

Impaired operation may result in severe injury or death.

Federal and state laws prohibit operating a boat under the influence of alcohol and other drugs.

If the operator's blood alcohol content is above the legal limit, violators are subject to fines and may go to jail. Violators may also lose automobile driving privileges.

PRODUCT MISUSE

Misuse of the product or use of it in a manner for which it was never intended can create dangerous situations. The boat operator and passengers are responsible for using the product safely and as intended. The driver must operate the boat in a manner that ensures the safety of all passengers. If you or your passengers are unsure about the proper use of the product, unsure about performing certain boating maneuvers or are unsure about a particular water activity, refer to this manual or contact a knowledgeable source, such as your local dealer, the US Coast Guard, or your local boating authority.

REPORTING ACCIDENTS

Boat operators may be required by law to file a Boating Accident report with their state boating law enforcement agency or local authority, the USCG, or their country's boating law enforcement agency when their boat is involved in certain boating accidents. A boating accident must be reported if there is a loss or probable loss of life or a personal injury requiring medical attention beyond first aid. In these situations, a formal report must generally be filed within 48 hours of the accident. Also a boating accident must be reported for accidents when damage exceeding $500 is incurred, or there is a complete loss of the boat. In these situations, a formal report must generally be filed within 10 days. If any of these events occur, seek further assistance from local law enforcement personnel. Please note that the submittal of a report is the responsibility of the boat owner. This requirement is different than laws associated with the reporting of automobile accidents.

RENDERING ASSISTANCE

If you see a distress signal or suspect a boat is in trouble, you must assume it is a real emergency and render assistance immediately. By law, the operator in charge of the craft is obligated to provide assistance to any individual in danger, presuming assistance can be safely provided. Failure to render assistance can result in a fine and/or imprisonment.

The 1971 Boating Safety Act grants protection to a "Good Samaritan" boater providing good faith assistance, and absolves a boater from any civil liability arising from such assistance.

HAZARDOUS CONDITIONS

Every waterway poses hazards that should be avoided. You will be best prepared to avoid these hazards if you are familiar with the waterway where you are boating. Whenever possible familiarize yourself with navigation charts, depth charts, and waterway maps before you go boating. The following information outlines some of the most common hazards which may be encountered:

Shallow Water Operation

Shallow water brings on obvious hazards such as sand bars, stumps, rocks, etc. Know the area in which you will be operating the boat. Grounding the vessel or striking submerged objects can result in serious injury or death and can cause severe damage to your watercraft. At high speed, this can cause rapid deceleration or stop your boat abruptly, which may cause occupants to impact the interior of the boat or be ejected. Stick to deeper water whenever possible, and if you must travel in shallow water, proceed at low speed and post a lookout.

Know the minimal depth your boat can safely travel.

Warning Markers

Learn to recognize the different buoys and day markers; they are used as the signposts of the waterways identifying navigable routes and water hazards. It is a good idea to ask local authorities about hazard areas and if they are marked. Stay within boundaries and clear of hazards.

Weeds

Weeds can generally be a threat to a boat's engine and other components on the boat. If weeds wrap around the propeller, they can create vibration in the engine. They also can restrict water intakes or clog the water filter causing the engine to overheat. Learn to recognize the typical normal operating temperature range for your engine. If temperature rises high above normal, then check for blockage of the engine cooling water system.

NOTICE

Weeds can sometimes be removed by shifting to NEUTRAL, pausing for a moment, then shifting to REVERSE to unwind the weeds from the propeller.

Dam Spillways

The area around dam spillways is very hazardous and conditions can change rapidly. Keep clear of the spillways and areas below dams. Currents created by spillways can draw in objects, including your boat.

Restricted Areas

Before boating, check with Local, State, and Federal authorities to identify restricted areas. Because of the threat of terrorism, the U.S. Coast Guard has and will continue to implement strict limits on watercraft near U.S. Navy and Coast Guard ships and other potential targets.

Weather/Seas

Learn and understand weather patterns and signs of change. Bad weather can cause an uncomfortable and unsafe situation. If a storm approaches, seek a safe harbor. Check forecasts before getting underway and continue to monitor conditions while on the water.

ENVIRONMENTAL CONCERNS

As a boater, you already appreciate nature's beauty and the peace of the great outdoors. It is a boater's responsibility to protect the natural environment by keeping waterways clean.

Aquatic Invasive Species (AIS)

Aquatic Invasive Species (AIS) are plants and animals that occur in waters in which they are not native and whose introduction causes or is likely to cause economic or environmental damage or harm to human health. AIS have a negative impact on the waterway, its native species, and recreational and commercial uses of the waterway. As responsible boaters and citizens, each boat owner should do their part to prevent the spread of these aquatic hitchhikers.

KC-6027

In many cases, it is also required by law. Check local regulations for any waterway where you will boat.

After each boating trip, follow these three simple steps before you leave the water access to stop the spread of AIS: Clean, Drain, and Dry. This is the boater's way to help protect the environment from the damage that AIS can cause.

Clean

- Inspect and remove all aquatic plants, animals, mud, and debris from the boat, engine, trailer, anchor, and any watersports equipment.
- Rinse, scrub or wash, as appropriate, away from storm drains, ditches, or waterways.
- Rinse watercraft, trailer, and equipment with hot water, when possible.
- Flush motor according to owner's manual.

Drain

Completely drain all water from the boat and its compartments, including but not limited to the bilge, wells, lockers, ballast tanks or bags, and engines.

Dry

Allow the boat to completely dry before visiting any other bodies of water. Water-borne organisms cannot survive long periods of dryness.

NOTE: *Some localities may require inspection or decontamination before and/or after launching. Check state and local laws and regulations for requirements prior to traveling to go boating.*

Fuel/Oil Spillage

The spilling of fuel or oil into our waterways contaminates the environment and is dangerous to wildlife. DO NOT EVER discharge or dispose of fuel, oil or other chemicals into the water; it is prohibited and can result in fines. These are three common, accidental types of discharge:

- During initial fueling of a nearly empty tank
- Overfilling the fuel tanks
- Pumping contaminated bilge water

⚠ WARNING

Fumes from rags can collect in bilge and pose an extremely hazardous fire and explosion risk, which can result in injury or death.

Never store rags used to wipe up fuel or solvent spills in the boat.

Dispense of rags properly ashore.

Discharge/Disposal of Waste

Waste means all forms of garbage, plastics, recyclables, food, wood, detergents, sewerage and even fish parts in certain waters – in short, nearly everything. We recommend you bring back everything you take out with you for proper disposal ashore.

Excessive Noise

Noise means engine noise, radio noise, loud conversation, or even yelling. Many bodies of water have adopted noise limits. Noise can carry a considerable distance on water, especially at night. Be sure to follow regulations and be courteous.

Speed/ Wake/Wash

Be alert for NO WAKE zones. You are responsible for any damage or injury caused by your wake/wash. Prior to entering a NO WAKE zone, reduce throttle, come off plane to the slowest steerable speed. Use caution when operating around smaller crafts, in channels and marinas, and in congested areas.

Some states and boating areas have imposed speed limits for the operation of boats, including, but not limited to, no-wake zones. Check local, state, and federal agencies as to laws and regulations. The U.S. Coast Guard and local boating authorities are excellent sources for this information, which can include penalties for failure to observe the requirements.

Exhaust Emissions

Increased exhaust (hydrocarbon) emissions pollute our water and air. Keep your engine tuned and boat hull clean for peak performance. Consult your Nautique dealer for information.

Paints

If your boat is kept in water where marine growth is a problem, the use of anti-fouling paint may reduce the growth rate. Be aware of environmental regulations that may govern your paint choice. Contact your local boating authorities for information.

Cleaning Agents

Household cleaners should be used sparingly and not discharged into waterways. Never mix cleaners and be sure to use plenty of ventilation in enclosed areas while cleaning your boat. DO NOT use products which contain phosphates, chlorine, solvents, non-biodegradable or petroleum based products. Refer to ***Care and Maintenance on page 7-1*** in this manual for more information.

MARPOL Treaty

The USCG enforces the International Convention for the Prevention of Pollution from ships, commonly referred to as the MARPOL Treaty (Marine Pollution). This treaty prohibits the overboard dumping of all ship-generated plastics, chemicals, garbage and oil.

ON PRODUCT WARNING LABELS

WARNING LABELS & LOCATIONS

Warning labels are placed at specific locations on your Nautique boat at the time of manufacture to alert you to potential hazards that may not be obvious. These labels also indicate how to avoid these hazards. Warning labels should never be removed and must remain legible. If you suspect a label is missing, or if a label becomes damaged or becomes unreadable (damaged, faded, or sun bleached), contact your dealer for replacement.

It is the responsibility of the boat owner and occupants of the boat to understand and comply with all warning labels and safety recommendations/requirements. The driver of the boat and the boat owner are responsible for the proper operation of the boat and the safety of the occupants of the boat. Failure to adhere to and comply with the on-product warning labels and safety statements labeled as dangers, warnings, and cautions that appear in this manual can lead to serious injury, or death, as well as property damage. READ AND ADHERE TO ALL WARNING PLATES AND LABELS from bow to stern, including those that are installed inside the engine compartment, lockers, and underneath seating.

Ski Nautique Safety Labels

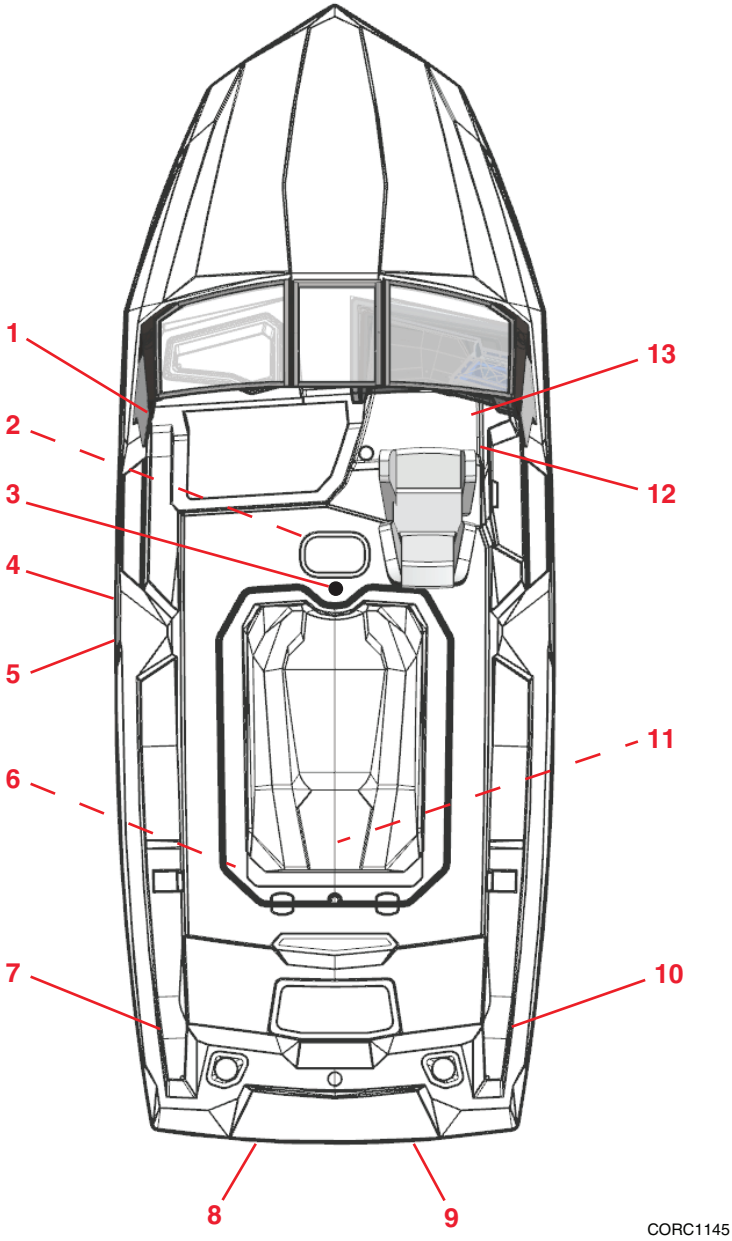

1. Passenger Remain Properly Seated (replacement pt#260105)
2. Leaking Fuel (replacement pt#80068)
   Leaking Fuel Canadian version (pt#140434)
3. Tow Point warning, Vertical (replacement pt#160177)
4. Warning French Fuel Fill (replacement pt#260100)
   (optional for Canada only)
5. Warning Fuel Fill (replacement pt#260099)
6. Reverse Polarity Warning (replacement pt#140255)
7. Warning Carbon Monoxide (replacement pt#260103)
8. Warning Carbon Monoxide (replacement pt#160158)
9. Warning Spinning Propeller (replacement pt#160157)
10. Warning Spinning Propeller (replacement pt#260104)
11. Caution Water Strainer (replacement pt#8293)
12. Max Capacity (replacement pt#260215)
    CE Max Capacity (replacement pt#260216)
13. Helm Warning *(with Fire System Light)* (replacement pt#260213)

Maximum Capacity Labels

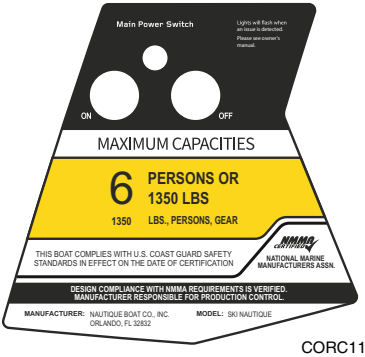

CORC1146

P/N 260215
CE P/N 260216

Helm Labels

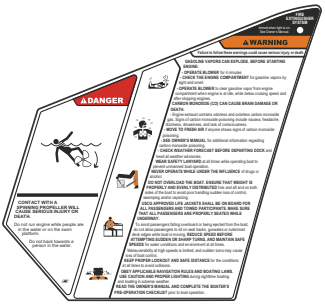

CORC1148

P/N 260213
(With Fire)

Passenger Compartment Label

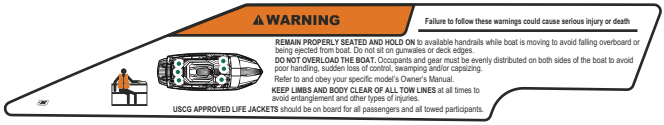

CORC1149

P/N 260105

Transom Labels

CORC0741a

P/N 160157

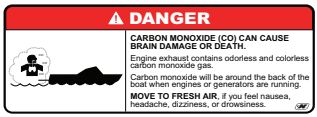

CORC0741b

P/N 160158

Fuel Warning Label

CORC0742b

P/N 80068

Miscellaneous Labels

CORC0743

P/N 140255

CORC1150

P/N 260101
(French Blower)

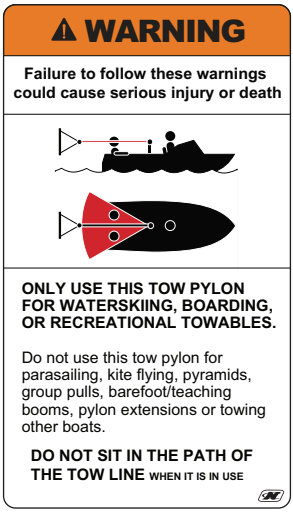

CORC0743b

P/N 160177

CORC1151

P/N 260100
(French Fuel Fill)

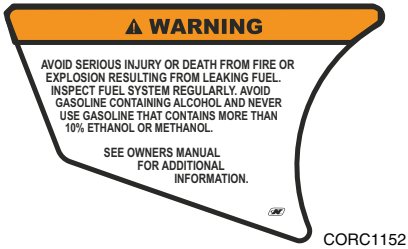

CORC1152

P/N 260099
(Fuel Fill)

Spinning Propeller Label

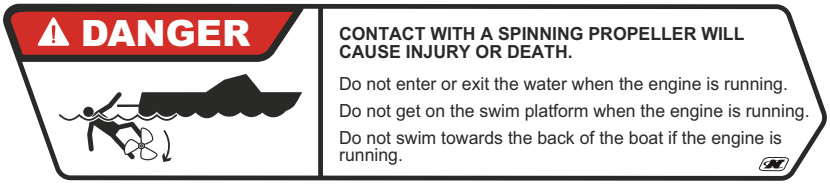

CORC1153

P/N 260104

Carbon Monoxide Label

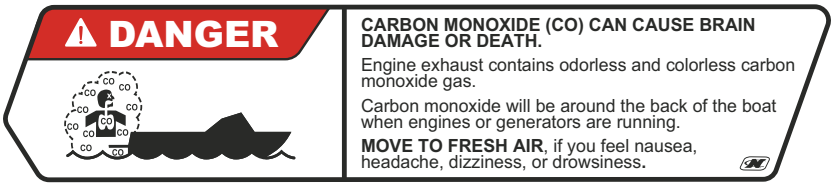

CORC1154

P/N 260103

California Emissions Label

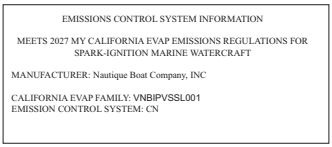

EMISSIONS CONTROL SYSTEM INFORMATION

MEETS 2027 MY CALIFORNIA EVAP EMISSIONS REGULATIONS FOR SPARK-IGNITION MARINE WATERCRAFT

MANUFACTURER: Nautique Boat Company, INC

CALIFORNIA EVAP FAMILY: VNBIPVSSL001
EMISSION CONTROL SYSTEM: CN

CORC1214

P/N 260299

Canadian Compliance Label

CANADIAN COMPLIANCE NOTICE
AVIS DE CONFORMITE CANADIEN

CORRECT CRAFT INC. (CTC)
ORLANDO, FLORIDA, USA

MODEL/MODÈLE: SKI NAUTIQUE

THE MANUFACTURER DECLARES THAT THIS VESSEL COMPLIES WITH THE PLEASURE CRAFT CONSTRUCTION REQUIREMENTS OF THE SMALL VESSEL REGULATIONS, AS THEY READ ON THE DAY ON WHICH THE CONSTRUCTION OF THE VESSEL WAS STARTED OR ON THE DAY ON WHICH THE VESSEL WAS IMPORTED.

LE FABRICANT ATTESTE QUE CE BATIMENT EST CONFORME AUX EXIGENCES DE CONSTRUCTION DES EMBARCATIONS DE PLAISANCE DU RÈGLEMENT SUR LES PETITS BÂTIMENTS, EN VIGUEUR, A LA DATE DU DÉBUT DE SA CONSTRUCTION OU A LA DATE DE SON IMPORTATION.

CORC0743d

P/N 180402

BASIC RULES OF THE ROAD

BOATING REGULATIONS

The U.S. Coast Guard (USCG) is the governing authority of the United States waterways and serves to help the boating public. State boating regulations are enforced by local authorities. Owners and users outside of the United States must be cognizant of that country's laws and regulations. You are subject to marine traffic laws and "Rules of the Road" for both federal and state waterways; you must stop if signaled to do so by enforcement officers, and permit them to board if asked.

Review and understand all local, state, federal, and country boating laws.

There are many USCG pamphlets available to you. These pamphlets go beyond the contents of this manual and explain "Rules of the Road," signal lights, buoys, safety, international and inland regulations. An example is the Ultimate Watersports Handbook you should have received with your new boat, or which can be ordered by contacting WSIA, go to: *www.WSIA.net*. For more information, contact your local USCG Unit or visit *http://www.uscgboating.org*.

You should be aware of these rules and follow them whenever you encounter another vessel on the water. The rules presented in this manual outline only the most basic of the nautical "Rules of the Road" and have been provided as a convenience only. Consult your local U.S. Coast Guard Auxiliary (USCGA), Department of Motor Vehicles (DMV) or local maritime authority for a complete set of rules governing the waters in which you will be using your boat. If you plan to travel—even for a short trip—you would be well served to contact the regional USCGA or DMV in the area where you will be boating.

The nautical Rules of the Road must be followed to prevent collisions between vessels. Like traffic laws for automobiles, the operator is legally required to follow the rules.

⚠ WARNING

Collisions between boats can cause death or serious injury.

Keep a proper lookout, safe speed, and follow the nautical "Rules of the Road."

ENCOUNTERING ANOTHER VESSEL

Any time two vessels on the water meet one another, one vessel has the right-of-way. It is called the “stand-on” or “privileged vessel.” The vessel which does NOT have the right-of-way is called the “give-way” or “burdened vessel.” These rules determine which vessel has the right-of-way, and accordingly, what each vessel should do.

Privileged Vessel

The privileged vessel has the right-of-way and has the duty to continue its course and speed, except to avoid an immediate collision. When you maintain your direction and speed, the other vessel will be able to determine how best to avoid you.

NOTICE

In general, boats with less maneuverability have right of way over more agile crafts. You must stay clear of the vessel with right of way and pass to his stern.

Sailboats and boats paddled or rowed have the right of way over motor boats. Sailboats under power are considered motorboats. Small pleasure craft must yield to large commercial boats in narrow channels.

Burdened Vessel

The burdened vessel does not have the right-of-way and has the duty to take positive and timely action to stay out of the way of the privileged vessel. Normally, the burdened vessel should not cross in front of the privileged vessel. The burdened vessel should slow down or change directions and pass behind the other vessel. The burdened vessel operator should always move in such a way that the privileged vessel operator can see what you are doing in ample time to avoid a collision.

Crossing

In crossing situations, the boat to the right from the 12 o'clock to the 4 o'clock position has the right-of-way, and it must hold course and speed. The burdened boat passes behind the privileged boat. Boats going up and down a river have the privilege over boats crossing the river. The illustration below depicts a situation in which you are the boat in the center and you are the privileged vessel. You must hold course and speed. All vessels approaching your vessel from the directions depicted by the red vessels must yield to your boat.

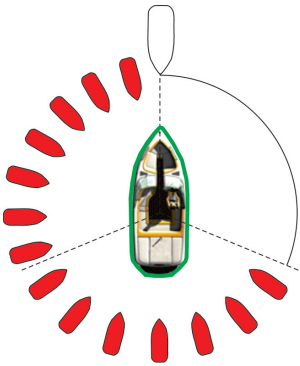

You are the privileged vessel.
You must stand on.

Conversely, the following illustration depicts a situation in which you are the boat in the center and you are the burdened vessel. You must give right-of-way to all vessels coming towards you from the directions shown in green.

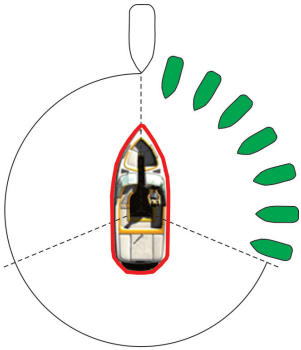

You are the burdened vessel.
You must give way.

Meeting Head-On

When meeting head-on, neither vessel has the right of way. Both boats should decrease speed, turn towards their right (starboard side) and pass on their left sides (port-to-port). However, if both boats are clearly on each other's right (starboard) side then, each vessel should sound two short blasts and pass on their right sides (starboard-to-starboard).

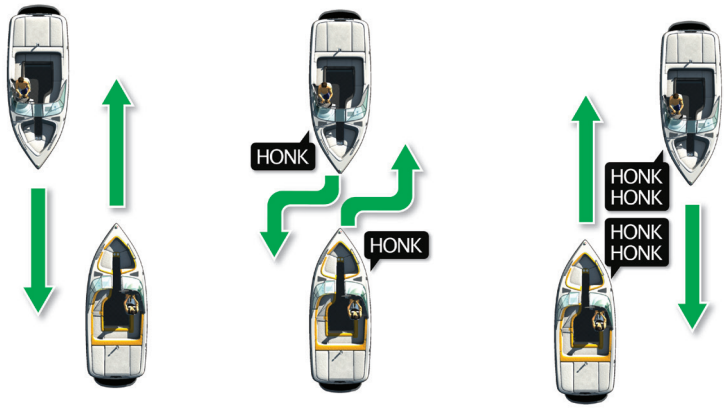

Passing
Port-to-Port

Meeting
Head-to-Head

Passing
Starboard-to-Starboard

CORC1139

Overtaking

The boat that is overtaking one ahead of it is the burdened boat and must make any adjustments necessary to keep out of the way of the privileged boat, until the burdened boat is well ahead and clear of the vessel being overtaken.

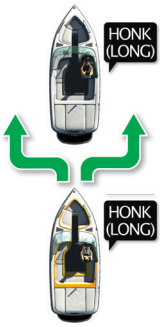

Privileged (Stand-On) Vessel
Being Overtaken

Burdened (Give-Way) Vessel
Overtaking

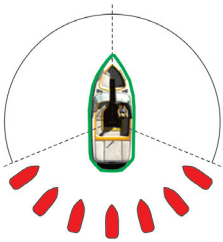

You are the privileged vessel being overtaken.
Red boats are burdened vessels overtaking.

CORC1140

The General Prudential Rule

The General Prudential Rule regarding right of way, is that if a collision appears unavoidable, neither boat has right of way. As prescribed in the "Rules of the Road," both boats must act to avoid collision.

Rule 2 in the International Rules says, "In construing and complying with these Rules due regard shall be had to all dangers of navigation and collision and to any special circumstances, including the limitations of the vessels involved, which may make a departure from these Rules necessary to avoid immediate danger."

Other Rules of the Road

When navigating in narrow channels, you should keep to the right when it is safe and practical to do so. If the operator of a power-driven vessel is preparing to go around a bend that may obstruct the view of other water vessels, the operator should sound a prolonged blast on the whistle or horn—four to six seconds.

If another vessel is around the bend, it too should sound the whistle or horn. Even if no reply is heard, however, the vessel should still proceed around the bend with caution.

If you navigate these type of waters, you should carry a portable air horn, which are available from local marine supply stores.

Aids to Navigation

Learn to recognize the different buoys and day markers; they are the signposts of the waterways. The United States Aids to Navigation System (USATONS) is the primary marking system used on inland water, coastal waters and rivers in the United States. This system is maintained by the U.S. Coast Guard (USCG).

There are two primary marking systems in use in the U.S.: the Uniform State Waterway Marking System (USWMS), used on inland waters and maintained by each state, and the Federal Waterway Marking System (FWMS), used on coastal waters and rivers and maintained by the USCG. In addition, the FWMS has two modified systems: the Western River Buoyage, and the Intercoastal Waterway Buoyage. Be sure to check with local authorities on the buoyage system in use in your boating region.

The type of hazard/warning buoys and markers depends on the area of jurisdiction. Check with local boating authorities.

USWMS System

In the USWMS Lateral System, well-defined channels are marked with red and black buoys, and the boat should pass between them.

The USWMS Cardinal System is used when there is no well-defined channel or where an obstruction may be approached from more than one direction. With the cardinal system:

- Pass north or east of BLACK-TOPPED WHITE buoy.
- Pass south or west of RED-TOPPED WHITE buoy.
- RED and WHITE VERTICALLY STRIPED buoy indicates boat should pass outside of the buoy (away from shore).

FWMS System

The FWMS Lateral System is for use on navigable waters except Western Rivers and Intercoastal Waterways. The markings on these buoys are oriented from the perspective of being entered from seaward (the boater is going toward the port). This means that red buoys are passed on the starboard (right) side of the vessel when proceeding from open water into port, and green buoys to the port (left) side.

The right side (starboard) of the channel is marked with RED, even numbered buoys. The left (port) side of the channel is marked with GREEN, odd numbered buoys.

The middle of the channel is marked with RED and WHITE vertically striped buoys; pass close to these buoys.

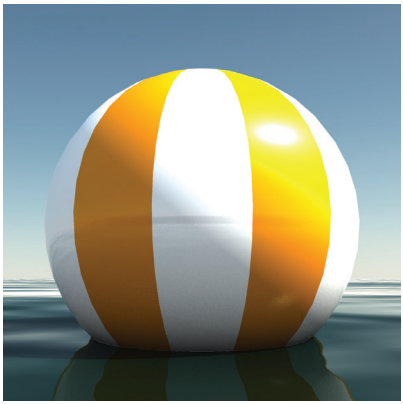

Spherical Safe Water Marker

Obstructions, channel junctions, etc. are marked with RED and GREEN horizontally striped buoys.

A RED band at the top means the preferred channel is to the left of the buoy; a GREEN top band means the preferred channel is to the right of the buoy.

Day markers are colored and numbered the same as buoys. RED, triangular day markers with even numbers mark the starboard side of the channel. GREEN, square day markers with odd numbers mark the port side of the channel.

Types of Buoys

There are several types and shapes of buoys. Buoys may be unlighted, lighted, with sound or may have both an audible and a visual signal. Lights, bells and horns are used on buoys for night or poor visibility conditions. Different shapes of buoys are shown below.

Unlighted Bell Buoy

Spar Buoy

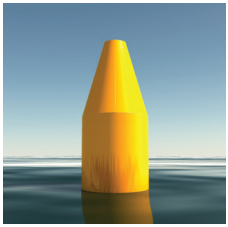

Nun Buoy

Lighted Buoy

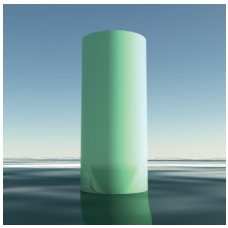

Can Buoy

CORC1141

FWMS Marking System

Buoys with unique light flashing characteristics are identified on nautical charts with the specific flashing pattern.

Mooring Buoys

The only buoys from which you are permitted to moor are mooring buoys. Mooring buoys are white with a blue horizontal stripe. Mooring to a navigation buoy, regulatory markers or lateral markers is illegal.

Mooring Buoy – White with Blue Band May Show White Reflector or Light

Uniform State Regulatory Markers

Regulatory markers indicate dangerous or restricted controlled areas. These markers are used to indicate speed zones, areas set aside for particular use, general information and directions.

Regulatory markers are white with orange geometric shapes and also have orange bands near the top and at the water line of the buoy. You must obey regulatory markers.

CONTROLLED AREA

DANGER

BOATS KEEP OUT

INFORMATION

Uniform State Waterway Marking System (USWMS)

Divers Flag

USED BY RECREATIONAL DIVERS – INDICATES POSITION.

Stay Far Away From Diver Flags Someone is underwater in the vicinity

Alpha Flag

WORLDWIDE VESSELS ENGAGED IN DIVING OPERATIONS – DOES NOT INDICATE DIVER'S POSITION

Stay Far Away From Diver Flags Someone is underwater in the vicinity

Distress Flag

INDICATES FELLOW BOATER IS IN NEED OF ASSISTANCE

CORC1142

Warning Markers

It is a good idea to ask local authorities if there are hazardous areas and how they are marked. Boaters must also recognize the flag designs, which indicate that skin divers are present and keep well clear of the area. Divers underwater cannot be seen. Stay well away from boats or floats displaying Diver Flags.

Skin Diver Warning Flag

Watch for swimmers. Swimming areas may not be marked. Steer clear from the area and remain alert.

Swim Area Warning Buoy

Navigation markers serve as a means of identifying navigable routes, and indicate water hazards. Boaters should become familiar with navigation markers and stay within marked boundaries and clear of hazards.

NIGHT RUNNING

Boats operating between sunset and sunrise (hours vary by state) must use navigational lights. Nighttime operation, especially during bad weather or fog can be dangerous. All “Rules of the Road” apply at night, but it is best to slow down and stay clear of all boats, regardless of who has right of way. Protect your night vision by avoiding bright lights and have a passenger, if possible, help keep watch for other boats, water hazards and aids to navigation. It is best to proceed slowly at night, as there is always the possibility of unlit boats, floating objects, and fixed objects which will be very difficult to see in time to avoid if you are at planning speeds or above.

There are many light patterns on different types of boats and for boats performing various functions while underway or at anchor. For most applications on recreational boats the following navigation light patterns are applicable.

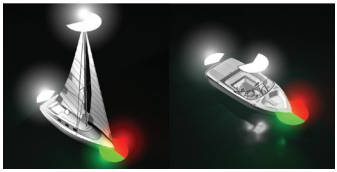

Figure 1

Motorboats less than 20 meters (65.62 feet) shall exhibit navigation lights as shown in ***Figure 1***.

NOTE: *Two masthead lights are optional for boats under 50 meters. Boats over 50 meters (164 feet) will display two masthead lights.*

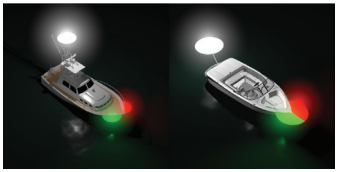

Figure 2

Motorboats of less than 12 meters (39 feet 4 inches) in length, may show the lights in either ***Figure 1*** or ***Figure 2***.

Boats of less than 7 meters (23 feet) whose maximum speed cannot exceed 7 knots may exhibit an all-around white light, and if practicable sidelights instead of the lights prescribed above, **in international waters only**.

Sailboats and Watercraft Under Oars

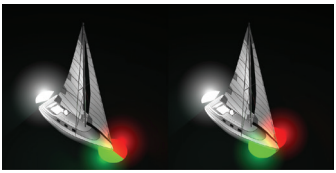

Figure 3

Sailboats less than 20 meters (65.62 feet) may exhibit the navigation lights shown in ***Figure 3*** or ***Figure 4***.

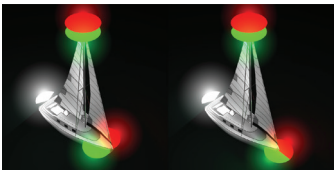

Figure 4

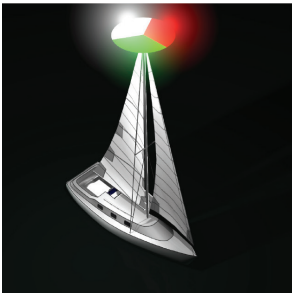

Figure 5

Another option for sailboats is to use a single combination lantern at the top of the mast as shown in ***Figure 5***.

Figure 6

Sailboats less than 7 meters (22.96 feet) may carry an electric torch or lighted lantern showing a white light to be displayed in sufficient time to prevent collision (see ***Figure 6*** - left picture).

If practicable, the lights prescribed for sailboats less than 20 meters should be displayed.

Watercraft under oars (such as a canoe) may display the lights prescribed for sailboats, but if not, must have ready at hand an electric torch or lighted lantern (flashlight) showing a white light to be displayed in sufficient time to prevent collision (see ***Figure 6*** - right picture).

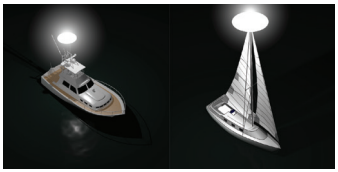

Figure 7

Anchored Boats

Motorboats and sailboats at anchor must display anchor lights. An anchor light for a watercraft less than 50 meters (164 feet) in length is an all-around white light, visible for 2 miles exhibited where it can best be seen (see ***Figure 7***).

Sailboats operating under machinery, or under sail and machinery, are considered power driven and must display the lights prescribed for a power-driven boat.

WATERSPORTS SAFETY

Skiers or riders are obligated to be aware of the same fundamental safety rules as boat operators. If you are new to water skiing, wakeboarding, wake surfing, and other towed watersports, seek certified training before starting. You will find it especially helpful to join a local ski club, World Wakeboard Association, and/or the USA Water Ski, when possible.

Always remember that the majority of injuries occurring while water skiing/ wakeboarding and other towed watersports are the result of impacts with other objects. Always look where you are going and be aware of what is going on around you.

When participating in towing watersports, be safe and courteous and follow these guidelines:

- Be considerate to fishermen and others who are sharing the same body of water.
- DO NOT perform watersports in congested areas.
- Stay away from navigation markers.
- Stay away from other boats and watersports participants.

DANGER

Contact with a spinning propeller will cause injury or death.

Do not enter or exit the water when the engine is running.

Do not get on the swim platform when the engine is running.

Do not swim towards the back of the boat if the engine is running.

⚠ WARNING

Failure to adhere to these warnings may result in severe injury or death to you and/or others.

- **Every towed person must always wear a USCG-approved personal flotation device.**
- **Always have an experienced driver and a designated observer in the boat while being towed.**
- **Maintain a distance of at least 100 feet from all other objects, including other boats, piers, rafts, mooring and navigational buoys, pilings, abutments, or any other items.**
- **Never waterski, wakeboard or participate in other towed watersports in shallow water, close to shore, or in water where you do not know the depth or what is beneath the surface.**
- **Never put your arm, head, or any other part of your body through the handle-bridle of the tow line nor wrap the line around any part of the body at any time.**
- **Never use different line lengths if towing more than one person or towable. Each person or towed device must be the same distance from the boat.**
- **Do not participate in watersports while under the influence of alcohol and/or drugs.**
- **Do not participate in watersports during inclement weather or on rough water.**
- **Never waterski, wakeboard or participate in other towed watersports directly in front of other boats who may run you over if you fall.**
- **Never waterski, wakeboard or participate in other towed watersports at night.**
- **Never jump from a boat that is moving at any speed.**
- **Make sure that everyone knows and uses approved towed watersports hand signals.**

HAND SIGNALS

Make sure that everyone knows and uses approved towed watersports hand signals, shown below.

Circle

Back to Dock

Cut Engine

Skier in Water

Skiers OK

Speed OK

STOP

Speed Faster

Speed Slower

Turn Left

Turn Right

CORC1143

TOWED PERSON SAFETY RESPONSIBILITIES

Most injuries and fatalities that occur on high-performance recreational tow boats occur to the persons being towed (water skiing, kneeboarding, wakeboarding, wake surfing, tubing, etc.). It is the responsibility of the boat operator to pay attention to a multitude of things while utilizing the boat for water tow sports. The towed person has little or no control over their path nor do they have much in the way of protection from impact with obstacles or other boats. Therefore, it is recommended that boat operators, observers, and towed persons communicate effectively and clearly as to their intentions and their surroundings. The main responsibilities for each participant are as follows:

Operators should:

- Assign a passenger to be a designated observer.
- Turn the engine off whenever a person is on the swim platform or in the water near the boat. This is especially important for the area near the back of the boat to avoid propeller injuries.
- Ensure that it is “all clear” behind the boat when starting the engine. Ask for verbal confirmation or hand signals that it is “all clear” behind the boat. Then, and only then, start the engine.
- Keep their main focus on maneuvering the boat safely while avoiding other boats, fixed objects, the shore, and shallow water.
- Use rear view mirrors to allow the driver to glance at the towed person, while still keeping their main attention on the path of the boat and the surroundings.
- Return safely to pick up towed persons or persons in the water. Keep the individual in view, approach slowly (preferably on the driver’s side), and shut off the engine when close to an individual in the water. Do not back up or operate the boat in reverse to a person in the water.

Operators should:

- Confirm for the boat operator that it is “all clear” behind the boat prior to starting the engine.
- Watch the towed person.
- Be responsible for communication of the signals and status of the towed person to the boat driver.

- Notify the boat operator of status and changing conditions with the towed person, and inform the boat driver of the towed person's readiness to start, their desire to go faster or slower, or that they have fallen and are in need of retrieval.
- Deploy the fallen skier flag when the towed person falls, if needed. In some states, it is required to raise the "fallen skier" flag when the skier has fallen.
- Monitor the tow line to ensure that it does not become tangled, it does not become wrapped around anyone in the boat, and it does not become wrapped around the towed person. Also monitor the tow line so that it does not become tangled in the propeller. Notify the boat operator if any of these conditions are observed to avoid potential injury.
- Remind the boat operator to shut off the engine when persons are on the swim platform or in the water near the back of the boat.

Towed persons should:

- Wear a PFD.
- Not approach the back of the boat if the engine is running.
- Not become entangled in a tow line or wrap a tow line around any body part.
- Know signals to communicate with the observer and boat operator.

ADDITIONAL PRECAUTIONS FOR TOWED SKIER/RIDER

- Wear wet suits or other protective gear when engaging in high energy skiing/riding to prevent abrasions, hypothermia, and injuries to sensitive areas of your body from impact with the water surface.
- Inspect watersports equipment for wear, fraying, etc., before use. DO NOT use if they show signs of wear or fraying. Ropes or watersport equipment tow points may break during use, causing you to coast into obstacles or fall with the risk of being struck by another vessel.
- Inspect the boat tow points before use. If there is any evidence of corrosion or other damage, do not use until it has been inspected by your authorized boat dealer.
- NEVER attach ski/wakeboard rope to anything but approved pylons and wakeboard towers. Make sure tow ropes are properly attached to the boat tow points.

- The skier/rider should verbally indicate that s/he is safely clear of the boat prior to operator starting the boat engine or putting the boat into gear.
- Slowly take up slack in tow lines before accelerating to watersports speeds. Jerking the slack out of a tow line can cause high forces on the rope and towing equipment. This may cause the rope or equipment to break and the rope to snap back at occupants of your boat and at the towed person.
- Never put your arm, head or any other part of your body through the handle/bridle of the ski or wakeboarding line, nor wrap the line around any part of the body at any time. If you fall, the line will tighten and forcefully constrict around your body part and may result in amputation.
- DO NOT ski near swimming areas, beaches, personal watercraft, or other vessels/boats.
- Never attempt land or dock starts. These activities will increase your risk of injury or death.
- DO NOT jump from a boat that is moving at any speed, nor enter or exit the water when the engine is running.
- DO NOT “back up” to anyone in the water, they will be in danger of hitting the spinning propeller which can cause severe injury or death.
- DO NOT follow directly behind another boat or skier/rider without leaving an adequate safe distance in case that towed person falls into the water. You will need ample time and distance to maneuver your boat away from that person in the water and to avoid their tow boat which will be circling back to retrieve their downed person.
- DO NOT participate in towed watersports at night. It is illegal and other boats will not be able to see you, nor will they anticipate or expect your presence behind the towing boat. Furthermore, once you fall they will not see you swimming.
- DO NOT tow with multiple skier/riders with different length ropes.
- DO NOT ski in limited visibility conditions.
- Never climb, sit or stand on a wakeboard tower. The wakeboard tower is intended for towing only as noted. It is designed to pull a limited number of individual(s), and in some cases only one (1) individual. Please consult the remainder of this manual and warning labels on tower for details. The wakeboard tower approved for use on your boat should be used only for water skis, wakeboards or recreational towables, and not for parasailing, kite flying or towing other boats.

- Many states require the use of “skier down” flags. Check your local lake and state requirements. Having the observer raise a skier down flag when your towed watersport participant falls down or off the towed device will alert boats around you to the fact that someone is in the water nearby and that they should avoid the area.
- Many lakes have recommended tow patterns. Other boats may expect that you know the local customs and practices. It is common that the tow pattern is counter-clockwise around the lake, but there are exceptions. Check for local recommendations or requirements.
- NEVER lift or trailer the boat with water in the bilge or in ballast tanks. Lift or trailer per manufacturer’s instructions.
- Around marina docks where electrical current is present (such as shore power connections) it is unsafe to swim as stray electrical currents may exist which can cause you to drown.

TOW LINE GUIDELINES

Tow lines come in different lengths and strengths for different activities. Make sure any line you are using is suited for skiing or riding and that it is in good condition.

- Never use a tow line that is frayed, knotted, unraveling or discolored from use or being left in the sun. If a line breaks while in use it can recoil at the skier/rider being towed or into the watercraft where it might strike passengers. Replace tow lines with any sign of damage.
- Never use a tow line with elastic or bungee material to pull skiers or riders.
- Tow line should be attached to the watercraft in an approved fashion with hardware designed for towing. Refer to your watercraft manual for instructions on proper tow line attachment.
- Always route tow lines away from the propeller, even when idling. Shut off the engine if your boat starts to cross a floating tow line.
- If a towline should become entangled in a propeller, shut the engine off, remove the safety shut off switch lanyard and put it in your pocket before retrieving the line.
- Tow lines should be neatly coiled and stowed in the boat when not in use.

FALLEN SKIER OR RIDER

Falling and injuries are common in water skiing and other towed watersports. Keep tow speeds in a comfortable range given the rules of the activity and the skill level of participants.

- Display a red or orange skier/rider down flag to alert other vessels that a skier/rider is down. In some states, it is required to raise the “fallen skier” flag when the skier has fallen.
- Turn the boat and slowly circle toward the person in the water to return the tow line handle or towed device to that person.
- Always keep the fallen skier/rider in view and preferably on the operator’s side of the watercraft.
- Put the watercraft in neutral whenever you are near a fallen skier/rider.
- Shut off the engine when retrieving someone from the water or if the person in the water gets too close to the boat. Do not trust neutral gear with an idling engine. Someone may accidentally or prematurely shift the gear, or the linkages may be out of adjustment and the propeller may still be slowly spinning.

DEVELOP WATER SENSE

The Watersports Responsibility Code and the Watersports Safety Code have been developed by WSIA and industry equipment manufacturers. These Codes are reproduced here for your reference.

Watersports Responsibility Code

WATER SENSE
SMART & SAFE • KNOW THE CODE

Familiarize yourself with and follow The Watersports Responsibility Code

Watersports Safety Code

WATERSPORTS SAFETY CODE

Before you get in the water: Skiing or riding instruction is recommended before use. Instruction will teach general safety guidelines and proper skiing or riding techniques, which may reduce your risk of injury. For more information on skiing or riding schools, contact your dealer, Association, or local ski club.

- Know the federal, state and local laws that apply to your area.
- If you are not familiar with a waterway, ask someone who is knowledgeable to tell you about any hidden dangers or things to avoid.
- Whether you plan to be in a watercraft, or skiing/riding behind one it is important you are wearing a properly fitted life jacket (PFD) approved by your country's agency, USCG Type III, ISO, etc.
- Inspect all equipment prior to each use, check bindings, fins, tube, attachment, tow rope and flotation device. Do not use if damaged.

Watercraft Safety: A knowledgeable and responsible driver is the most important safety device on any watercraft.

- Never operate a watercraft, ski or ride under the influence of alcohol or drugs.
- Only use water ballast and people for additional weight.
- Never exceed the passenger or weight limitations of the watercraft.
- Never allow passengers to hang outside the watercraft or towed device or sit on the gunwales or anywhere outside of the normal seating area.
- Never allow water to overflow the bow or gunwales of the watercraft.
- Uneven weight distribution or additional weight may affect the handling of the watercraft.

Carbon Monoxide: The exhaust from the engine on a watercraft contains Carbon Monoxide (CO) which is a colorless, odorless and poisonous gas. Excessive exposure to CO can cause severe injury or death. Follow this advice to avoid injury.

- Never "Platform Drag" by holding onto the boarding platform or being dragged directly behind the watercraft. This is where CO will be.
- Do not sit on the watercraft transom or boarding platform while the engine is running.
- Make sure the engine is properly tuned and running well. An improperly tuned engine produces excessive exhaust and CO.
- If you smell engine exhaust do not stay in that position.
- Go to the United States Coast Guard's website: (www.uscgboating.org) for more information on how to help protect yourself and others from the dangers of CO.

Tow Ropes: Tow ropes come in different lengths and strengths for different activities. Make sure any rope you are using is suited for that activity and that it is in good condition.

- Never use a rope that is frayed, knotted, unraveling or discolored from use or being left in the sun. If a rope breaks while in use it can recoil at the skier/rider being towed or into the watercraft where it might strike passengers. Replace tow ropes with any sign of damage.
- Never use a tow rope with elastic or bungee material to pull skiers or riders.
- Rope should be attached to the watercraft in an approved fashion with hardware designed for towing. Refer to your watercraft manual for instructions on proper tow rope attachment.
- Always keep people and tow ropes away from the propeller, even when idling.
- If a towline should become entangled in a propeller, shut the engine off, remove the safety shut off switch lanyard and put it in your pocket before retrieving the line.
- Tow ropes should be neatly stowed in the boat when not in use.

Preparing to ski or ride: Always have a person other than the driver act as an observer to look out for the skier/rider.

- Be sure the driver is aware of the experience and ability of the skier/rider.
- The driver, observer and skier/rider need to agree on hand signals before skiing or riding. Signals should include READY, STOP, SPEED UP, and SLOW DOWN.
- Start the engine only after making sure that no one in the water is near the propeller.
- Turn the engine off when people are getting into or out of the watercraft, or in the water near the watercraft.
- Always make sure the tow rope is not wrapped around anyone's hands, arms, legs, or other parts of the body.
- Start the watercraft and move slowly to remove slack until the tow rope is tight.
- When the skier/rider signals READY and there is no traffic ahead, take off in a straight line. Adjust the speed according to the signals given by the skier/rider.

Skiing or Riding: The watercraft and skier/rider should always maintain a sufficient distance from obstacles so a skier/rider falling or coasting and/or watercraft will not encounter any obstacle.

- Do not use in shallow water or near shore, docks, pilings, swimmers, other watercraft, or any other obstacles.
- Use only on water.
- Never attempt land or dock starts. This will increase your risk of injury or death.
- Always wear a properly fitted life jacket (PFD) approved by your country's agency, USCG Type III, ISO, etc.
- The faster you ski or ride, the greater your risk of injury.
- Never make sharp turns that may cause a slingshot effect on the skier/rider's speed.
- The skier/rider should be towed at an appropriate speed for his or her ability level.

Fallen skier or rider: Falling and injuries are common in skiing or riding.

- Circle a fallen skier/rider slowly to return the tow rope handle or pick up the fallen skier/rider.
- Turn off the engine when near a fallen skier/rider.
- Always keep the fallen skier/rider in view and on the driver's side of the watercraft.
- Display a red or orange skier-down flag to alert other vessels that a skier/rider is down if required by the state in which you are operating.

The Warnings and practices in the Watersports Safety Code represent common risks encountered by users. The code does not cover all instances of risk or danger. Please use common sense and good judgment.

EMERGENCY PROCEDURES

In an emergency situation, you may have to resort to measures which are not commonly practiced. Always assess the dangers of being in harm's way versus the protection of equipment. Keep a sound mind during an emergency and always use common sense.

EXPLOSION AND FIRE

Many boat fires and explosions involve flammable liquids such as gas or oil, which are used in your boat's propulsion engine(s) and generator. Carefully follow all warning labels and safety precautions while handling flammable substances. Many fires in inboard boats start in the bilge area due to gasoline vapors. Gasoline vapors are heavier than air and collect in the bilge of boats.

Explosion

If explosion is imminent, put on PFDs, grab distress signals and survival gear, and immediately abandon ship.

Fire

- Immediately turn off engines, generators, stoves and blowers.
- Extinguish smoking materials.
- A fixed fire suppression system, if equipped, has heat sensors that automatically flood the machinery space with a fire extinguishant. Allow extinguishant to "soak" the compartment for at least 15 minutes to cool the hot metals or fuel before cautiously inspecting the fire area. Have portable fire extinguishers ready. Do not breathe fumes or vapors caused by the fire or extinguishant.
- If no fixed fire suppression system is installed and a fire is in the engine compartment, discharge portable fire extinguishers through the engine compartment access plate, if equipped. DO NOT open the engine hatch as this feeds oxygen to the fire.
- If you have access to the fire, direct the contents of the fire extinguishers at the base of flames, not at the top.
- Throw burning materials overboard if possible.
- Move anyone not needed for firefighting operations away from the flames.
- Signal for help.
- Put on PFDs (Personal Flotation Devices), grab distress signals and survival gear, and prepare to abandon ship.

⚠ WARNING

Burn hazard from gasoline floating on water which is ignited can cause death or serious injury.

Gasoline will float on top of water and can burn. If the boat is abandoned, swim upwind, far enough to avoid fuel that can spread over the surface of the water.

SWAMPING AND FLOODING

In the event that the vessel begins to take on water, turn on the bilge pump to evacuate water and slow its accumulation, and try to determine the source of the water. A collision with an underwater object can cause the hull to develop a leak. A loose fitting hose clamp on a piece of equipment can cause a leak. Try to repair the leak if possible. If a leak is threatening the safety of you and your passengers, call or signal for assistance.

- Turn on bilge pump(s).
- Access PFDs, pass them out to everyone, and put them on.
- Identify source of leak and try to stop the leak and flooding.
- STAY WITH THE BOAT! A boat will usually float even if there is major hull damage. Rescuers can spot a boat much easier than a head bobbing in the water.
- Signal or call for help.
- If others were on board, try to locate them, make sure that they are conscious and that they can swim.
- Immersion in water speeds the loss of body heat and can lead to hypothermia (the abnormal lowering of internal body temperature).

CAPSIZING

- If others were on board, try to locate them, make sure that they are conscious and they can swim.
- If possible, access lifejackets (PFDs), pass them out to everyone, and put them on.
- STAY WITH THE BOAT! A boat will usually float even if there is major hull damage. Rescuers can spot a boat much easier than a head bobbing in the water.
- Signal or call for help.
- Immersion in water speeds the loss of body heat and can lead to hypothermia (the abnormal lowering of internal body temperature).

STAYING AFLOAT

- Remain calm. Do not thrash about or try to remove clothing or footwear. This leads to exhaustion and increases the loss of air that may keep you afloat.
- Keep your lifejacket (PFD) on.
- Keep your knees bent.
- Float on your back and paddle slowly to safety.

COLLISIONS

- Immediately account for all passengers.
- Check for injuries.
- If any person is in the water make sure they have proper flotation devices.
- Assess the hull for damage.
- Activate the bilge pump(s) to reduce any flooding.
- Try to operate the boat to keep the damaged area above water.
- If necessary, call or signal for assistance.
- STAY WITH THE BOAT!

GROUNDING

In the event you run aground, assess the situation before proceeding. Your response to grounding will depend on how hard the boat hits bottom and whether the boat remains stranded, the extent of damage, and proximity to shore and help.

- If it is a simple touch, you may need only to inspect the hull.
- If you are aground, assess the situation before reacting. In some cases, throwing the boat into reverse can cause more damage.
- Check for leaks and immediately stop any water from entering the boat.
- Inspect the hull, steering system and propulsion system for damage.
- Maneuver the boat to safe water only if the hull and all operating systems are in satisfactory operating condition. Otherwise, call or signal for assistance.

PERSON OVERBOARD

- Immediately react to a person who has fallen overboard by sounding an alarm.
- Keep the victim constantly in your sight.
- If another passenger is on board, assign them to look at and keep pointing at the person in the water. They are to do nothing else but stay focused on the person in the water and to point at them.
- Throw the person a life preserver even if they are wearing a PFD. It will serve as a marker in the water and will provide additional flotation.
- Immediately slow or stop the boat and safely circle toward the victim as soon as possible.
- Keep the victim on the helm side of the vessel so as to keep the victim constantly in your sight.
- When almost alongside, shut off the engine.
- Assist the person into the boat.

DROWNING

- Swim to rescue a drowning victim only as a last resort.
- Immediate resuscitation is critical! It may be possible to revive a drowning victim who has been under water for some time and shows no sign of life. Start CPR immediately and get the victim to a hospital as quickly as possible.
- Keep the victim warm.
- Use care in handling. Spinal injury may exist if the victim fell overboard.
- Call and signal for help.

MEDICAL EMERGENCY

In an emergency, you may be far from professional medical assistance. Be prepared and know how to use your first aid kit. Be aware of any special medical conditions of your passengers.

OPERATION FAILURE

If you experience a propulsion, electrical, steering or control failure, immediately shut off the engine. If it is safe to do so and you are qualified, then try to determine the cause of the failure and repair. Otherwise, call or signal for assistance. Anchor the boat if drifting will put you and others in danger.

TOWING

⚠ WARNING

Towing or being towed stresses the boats, hardware and lines. Failure of any part can seriously injure people or damage the boat.

A recreational boat towing another should be a last resort due to the potential for damaging one or both boats. The Coast Guard or a private salvage company is better equipped for this activity. A recreational boat may assist by standing by, and possibly by keeping the disabled boat's bow at a proper angle until help arrives. Only when conditions are ideal—that is, waters are calm, disabled boat is small, appropriate hardware is available, and one or both skippers know the correct technique—should a recreational boat tow another.

Towing Vessel

- Be sure your boat will not run aground too.
- Because you are maneuverable and the grounded boat is not, you should pass the tow line to the grounded boat.
- Select an appropriately strong tow line. Use double-braided or braid-on-braid line. Never use three-strand twisted nylon; it has too much elasticity and can snap back dangerously.
- Select an appropriate attachment point. If available fasten the tow line to the forward tow pylon of the towing boat. Otherwise fasten tow line to stern tow point. Fastening to the stern tow point will restrict maneuverability of the towing boat.
- If possible, use a bridle.
- Move slowly to prevent sudden strain on slack line.
- Proceed at slow speed.
- Avoid abrupt changes in throttle as that may cause the tow line to slacken and jerk tight. Sudden strain or jerking the line causes excessive tow line forces which may part the line. Keep slack out of the tow line, but if it occurs proceed slowly to again take up the strain on the line and avoid sudden jerks in the line.
- Be ready to cast loose or cut the line if the towing situation becomes hazardous.

Vessel Being Towed

- Attach the tow line to the bow eye.
- If it is necessary to be towed after being freed, keep someone at the wheel to steer.

Both Vessels

- If you attach the tow line to a fitting, be sure the fitting is fastened with a through bolt and is reinforced on the underside.
- Keep lines clear of propellers on both boats.
- Keep hands and feet clear of the other boat. Do not get caught, or pinched between the two boats as severe injury could occur.
- Never hold a tow line after it is pulled taut.

NOTES

NAUTIQUE

Section 2
Ski Nautique

SPECIFICATIONS

Length Overall	20' 0" (6.10 m)
Length with Platform	21' 10" (6.65 m)
Lifting Ring Spacing	18' 7" (5.66 m)
Beam	95" (2.41 m)
Draft	21" (0.53 m)
Approximate Dry Weight*	2,945 lbs (1,336 kg)
Fuel Capacity	29 Gallons (109.8 L)
Maximum Capacity	6 People (1,351 lbs/613 kg)
Horsepower Range	449 HP (335 kW)
Torque Range	465 lb-ft (630 N·m)
Gear Reduction Ratio	1.23:1

* Dry weight represents a boat with standard equipment including battery minus fuel.

NAUTIQUE

NOTICE

The dash configurations used in this section may show more features than what is included in your Nautique.

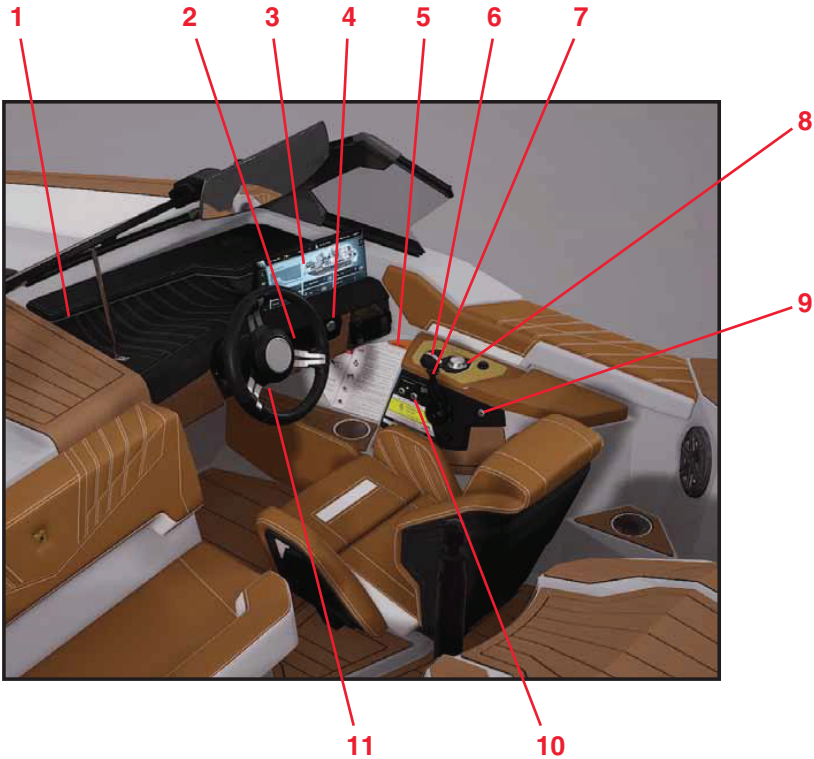

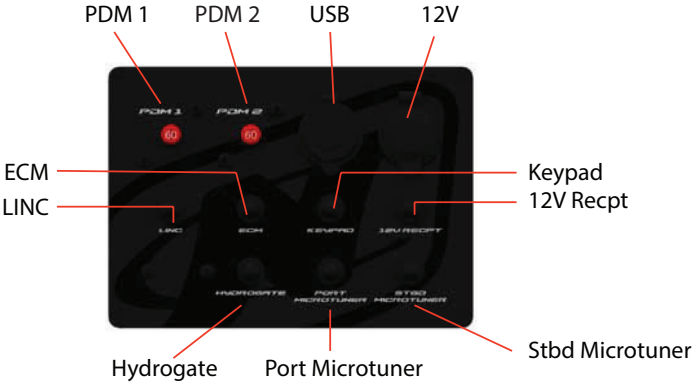

CORC1155

SKI NAUTIQUE DASH POD AND CONSOLE

1. USB Charger Port
2. Start Button
3. LINC Panoray Display
4. Horn Button
5. Fire Extinguisher System Manual Pull Cable
6. Shift/Throttle Control Handle
7. Shift Safety Lockout Umbrella
8. Helm Command
9. Shift Override Button
10. Main Power Switch and Indicator Lights
11. Steering Wheel Tilt Lever

NOTICE

A full description of the gauges and switches and their functions is discussed in ***Controls and Indicators on page 3-1****.*

SKI NAUTIQUE DECK LAYOUT

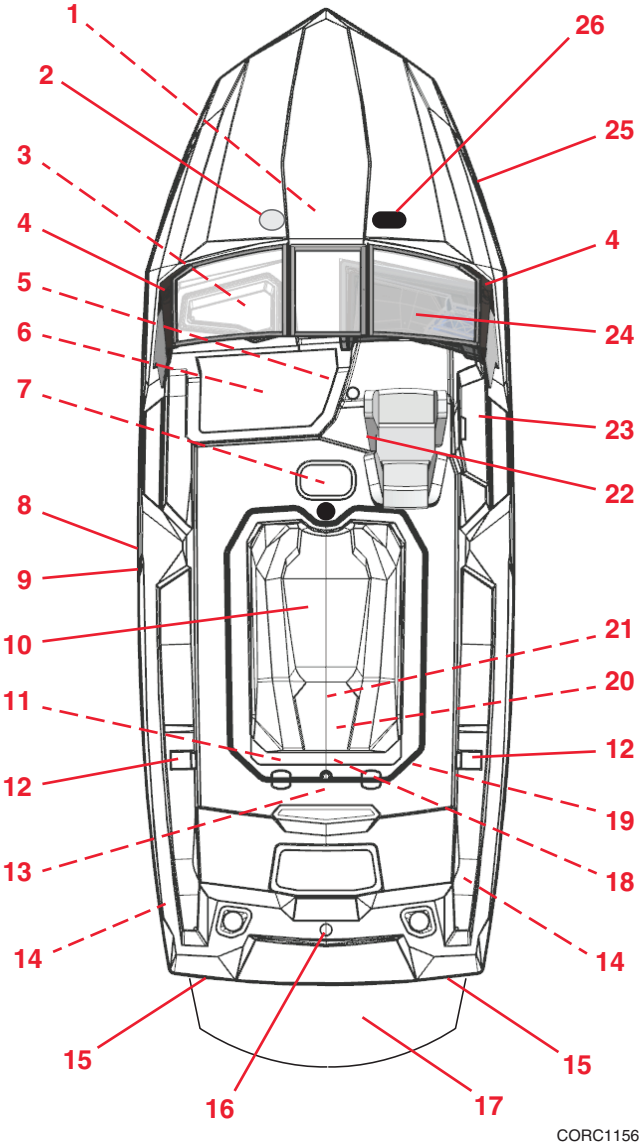

Description

1. Anchor Light Storage
2. Satellite Antenna
3. Glove Box / Stereo / USB / USBC / Aux / 12V / Seat Heater Switch
4. Bow Navigation Lights
5. Breaker Circuit Panel
6. Observer's Seat Storage
7. T-Handle Drain
8. Fuel Fill
9. Fuel Vent
10. Engine Cover
11. Battery / RBS Electrical Panel
12. Ski Restraint
13. Propeller Shaft Dripless Packing
14. CE Bilge Pump Filter (optional)
15. Stern Lifting Ring
16. Anchor Light Receptacle
17. Boarding Platform
18. Engine Cooling Water Intake Shutoff Valve
19. Rudder Shaft Remote Lube Fitting
20. Engine Cooling Water Intake Strainer
21. CE Fire Suppressor
22. Operator's Seat Adjustment
23. Console
24. Dash Pod
25. Horn
26. GPS Antenna

SEATING AREA – SKI NAUTIQUE

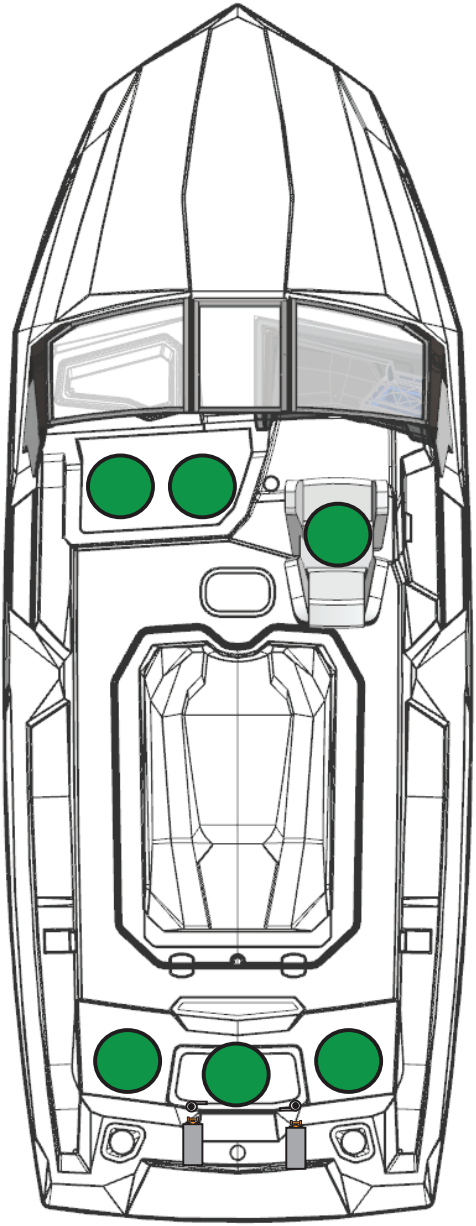

6

Designated Occupant Positions

WARNING! Occupying the stern of the boat including the swim platform, transom seating and sundeck area with the engine running can result in carbon monoxide poisoning, contact with a moving propeller, or ejection from the boat causing cuts, lacerations, severe injury or death. These areas should only be occupied when the boat is at rest and the engine is off.

CORC1157

STANDARD AND OPTIONAL EQUIPMENT

Nautique boats are equipped with only the finest standard and optional equipment available. Your boat's equipment will vary, based on how your boat was built. Many options can only be installed during the manufacturing of the boat and cannot be retro-fitted to boats in the field.

Not all of the standard or optional equipment's use, safety and maintenance information can be covered in this manual. You will find most of the standard and optional equipment in this manual in the section pertaining to its use and function in ***Controls and Indicators on page 3-1***. Make sure you read and understand this manual and all other manufacturers' literature provided in your Skipper's Kit to ensure your safety and maximize the benefits and uses this equipment has to offer.

If you have any questions regarding the use of any equipment on your Nautique boat, contact your Nautique dealer.

NOTES

NAUTIQUE

Section 3
Controls and Indicators

Knowing the systems, controls and indicators on your boat is essential for safe and proper operation.

⚠ WARNING

Improperly maintained controls are hazardous and may cause sudden loss of control. Make sure all steering and shift / throttle hardware, cables and fluid levels are regularly inspected and maintained. Improper maintenance may result in a loss of control, possibly causing serious injury or death.

STEERING

The steering system in your Nautique boat provides excellent maneuvering performance for pleasure boating or during watersports. Boat steering is not self-centering. Always keep a secure grip on the steering wheel to maintain full boat control. The steering wheel is equipped with a tilt lever to adjust the wheel angle to a comfortable operating position when the boat is not moving.

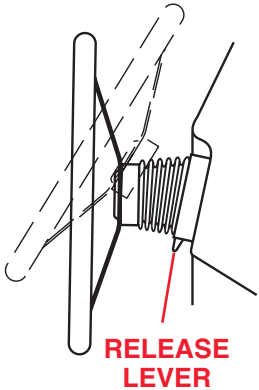

CORC133

The helm transfers rotary motion of the steering wheel to linear motion in the cable which pushes or pulls the rudder. Nautique rudders are equipped with an adjustable trim tab to compensate for the torque generated by the propeller.

Maintenance for the steering system is minimal because there are few serviceable parts. The rack and pinion for the system is lubricated and sealed during manufacturing. It is the responsibility of the owner/operator to inspect the steering system frequently.

If you experience difficulty in steering, refer to ***Care and Maintenance on page 7-1***.

⚠ WARNING

Hazard from improper maintenance of the controls can cause death or serious injury from sudden loss of control. DO NOT operate your boat if you suspect the steering system or control are malfunctioning.

Make sure all steering and shift/throttle hardware, cables and fluid levels are regularly inspected and maintained. Have your Nautique dealer investigate any steering system or control irregularities immediately.

SHIFTER/THROTTLE

⚠ WARNING

Hazard from replacing your shift/ throttle control without a start-in-gear protection system can cause death or serious injury. DO NOT replace the control with a control that does not have this feature.

Your Nautique boat is equipped with a Shifter/Throttle Control Handle which features a start-in-gear protection to prevent the boat from moving when started.

A single-lever control with a safety lock-out umbrella operates as both a gear shifter and a throttle control. To engage the throttle only without shifting into gear, depress the Shift Override button. When the throttle lever is vertical, it is locked in the NEUTRAL position for safety. Be sure the control is in NEUTRAL before attempting to start the engine. Lifting the safety lock-out umbrella and moving the throttle lever forward will engage FORWARD gear in the transmission and increase the engine RPM. Moving the throttle lever backward will engage REVERSE gear in the transmission and also increase the engine RPM.

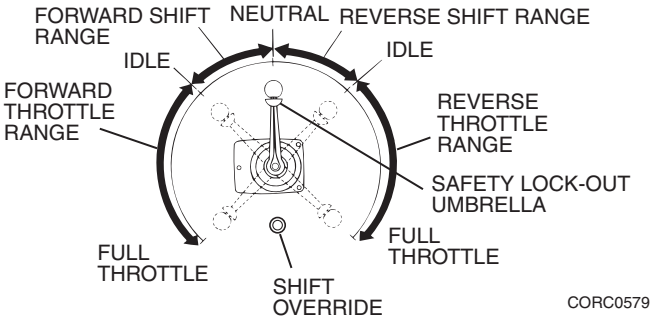

⚠ CAUTION

DO NOT shift too quickly from FORWARD to REVERSE. Stay in NEUTRAL, or idle position until the boat has lost most of its headway before completing the shift to REVERSE or engine / transmission damage may occur.

EMERGENCY STOP SWITCH

The emergency stop switch will stop the engine when the lanyard is pulled far enough to disengage it from the switch. Attach the lanyard to the boat operator whenever the engine is running but be aware there will be a loss of engine power if the switch is activated. If the operator is thrown from the seat, or moves too far from the helm, the lanyard will become disconnected from the switch, shutting off the engine. Refer to ***Boating Safety on page 1-1*** for more information.

⚠ CAUTION

DO NOT allow your boat to be operated without the proper use of the emergency stop switch and lanyard.

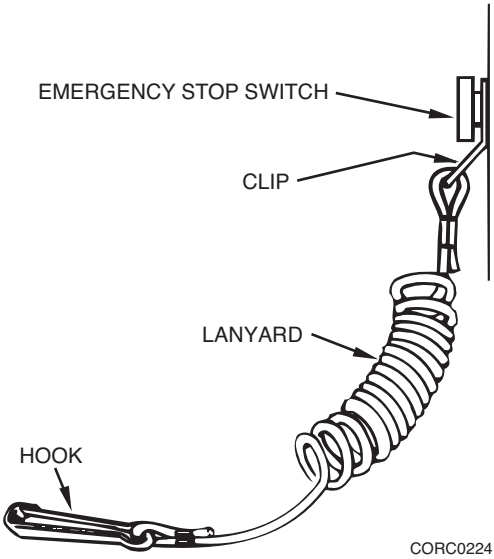

To attach a lanyard, connect the clip to the emergency stop switch and the hook to a strong piece of clothing on the operator, such as a belt loop.

NOTICE

The engine will not start unless the emergency stop switch is attached.

⚠ WARNING

Hazard from improper use of the emergency stop switch can cause death or serious injury. The emergency stop switch is designed to stop the engine if the operator is accidentally thrown from the helm. Attach the lanyard to the operator before starting the engine.

The emergency stop switch can only be effective when it is in good working condition.

Observe the following:

- DO NOT remove or modify an emergency stop switch and/or its lanyard.
- The lanyard must be free from obstructions that could interfere with its operation.

Once a month: Check the emergency stop switch for proper operation. With the engine running, pull lanyard. If the engine does not stop, see your Nautique dealer for service of the switch.

⚠ WARNING

The intakes that supply fresh air into the bilge area are located on the deck just aft of the ski locker storage compartments. The intakes must remain clear to allow air to enter the bilge area. DO NOT drape towels or any items which may not allow air to be drawn in while the bilge blowers are operating.

HELM INSTRUMENTATION AND FUNCTIONS

Your Nautique boat is equipped with a LINC Panoray Display that allows you to see and control the many different diagnostic information and systems on your boat. Please refer to the ***"Preferences Menu"*** section in the ***LINC Panoray Owner's Manual*** to learn how to access the gauge displays.

- **Volts** – Indicates the condition of the engine's cranking battery in volts DC. With the ignition switch on and the engine not running, a reading above 12.5 volts indicates a fully charged battery. With the engine running at idle, the gauge should read between 12.5 and 13 volts. With the engine running at cruising speeds and above, it should show 13 to 14.5 volts. Have your Nautique Dealer check the charging system if the voltmeter reads outside these normal ranges.
- **Temp** – Indicates the engine coolant temperature. Refer to the engine manual for normal operating temperature. After starting the engine, check your temperature gauge for abnormally high reads. If the reading is outside the manufacturer's operating range, immediately turn off the engine. An abnormally high temperature indicates a cooling system problem. Consult your Nautique Dealer when experiencing a high engine temperature reading.
- **Fuel** – Indicates the approximate fuel level in the fuel tank. The accuracy of the fuel gauge may vary as the attitude of the boat changes; the reading is only an approximation. As a general guideline, always use the "One-Third" rule. Use one third of the fuel to reach your destination, one third to return and one third as reserve fuel.
- **Oil Pressure** – Measures the pressure of the engine's lubricating oil. Refer to the engine manual for normal operating pressure. Many serious engine problems are reflected on oil pressure gauge readings. If the pressure is lower than manufacturer's specification, immediately turn off the engine. Contact your Nautique Dealer to correct the problem before operating the engine.
- **Tachometer / Hour Meter** – Registers engine speed in revolutions per minute (RPM). Use the tachometer to keep the engine within the proper operating range. Consult the engine manual for the proper RPM operating range of your engine. The accumulative engine run hours are displayed on the LINC screen. Time will not be logged unless the ignition switch is on and the engine is running. Use the hour meter to keep accurate logs for scheduled maintenance.

- **Speedometer** – Forward speed is registered through the Linc Display and shows either Miles Per Hour (MPH) or Kilometers Per Hour (KPH). The speed is detected by a GPS antenna which sends the signal readout to the LINC Display. Nautique offers an optional Paddlewheel for customers who use their boat in waters that have a flowing current, such as a river.
- **Engine Warning / Faults** – The LINC display is constantly receiving diagnostic information from the engine and other systems and will alert the operator if any concerns arise so that immediate actions can be taken.

CONTROL SWITCHES

All circuits are digitally controlled by the LINC Display and are protected by digital circuit breakers. When there is an issue with a circuit, the LINC Display will show which circuit has the issue and once the issue is fixed the circuit can be digitally reset within LINC.

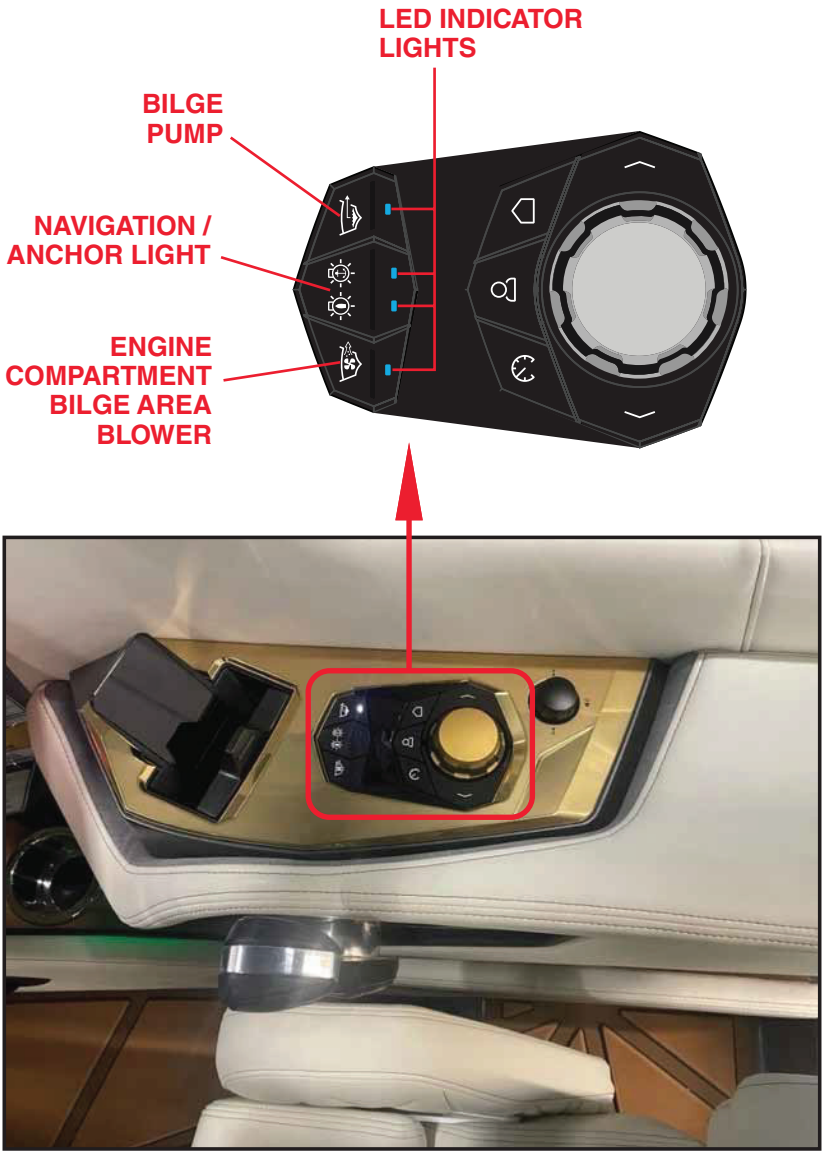
LED INDICATOR LIGHTS
BILGE PUMP
NAVIGATION / ANCHOR LIGHT
ENGINE COMPARTMENT BILGE AREA BLOWER

CORC1078

Engine Compartment/Bilge Area Blower

The blower switch activates the engine compartment ventilation blower to remove explosive fumes from the area. The blower is turned on or off by pressing and releasing the button. The blower must be operated for a minimum of four minutes each time before starting the engines. In addition, the blower should be operated continuously when at idle or running at slow speeds.

WARNING

Explosion and fire hazard from gasoline vapors can cause death or serious injury from failure to check for fumes in the engine compartment or operating the blower. Before engine start-up, check engine compartment for gasoline vapors, then operate blower for at least four minutes. Operate blower whenever below planing speed.

Navigation/Anchor Lights

A quick press and release of this button turns on the navigation lights, and the indicator light for this button will illuminate. A press and slight hold will only turn on the anchor light and cause the indicator light to flash. A press and release of the key turns off both of the lights.

WARNING

Blocking navigation lights can cause death or serious injury. DO NOT block the navigation lights.

Bilge Pump

The bilge switch turns on the bilge pump to remove excess water from the bottom of the boat. The pump turns on or off by pressing and releasing the button. There is a bilge pump near the rudder and one in the front. When you turn the switch on, the pump(s) will operate and run for several moments to “sense” if there is water in the bilge. If there is water in the bilge, the pump(s) remains on until the water is pumped out. If there is no water in the bilge, the pump(s) will turn off. If you want immediate pump action, turn the switch off and then back on again. The pump(s) will turn on periodically to determine if there is water in the bilge. If so, they will remain on until the water is pumped out.

The bilge pumps will not drain significant power while automatically cycling to detect water. Each bilge pump also has a backup float switch. This float switch will turn on the pump if there is excessive standing water in the bilge whether the battery switch is on or off.

NOTICE
Trash in bilge area can damage the bilge pumps.

Horn

The horn button is a momentary switch. The horn will operate whenever the button is pressed and will stop when the button is released.

12-VOLT PORT

These receptacles can be used to power and charge small electronics such as cell phones, ballast pumps and air inflators. These receptacles are powered through a 15-amp breaker.

START/STOP SEQUENCE

STARTING UP YOUR BOAT

To begin the sequence of starting your boat engine, first press and release the ON button located on the Battery Switch button pad. The small buttons below the ON/OFF buttons will light up, indicating the batteries are turned on.

Battery Switch

On the gunwale under the helm

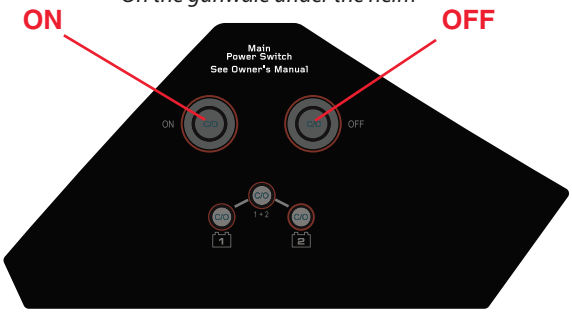

CORC1124

Next, press and release the “Start/Stop” button (located on the dash to the right of the steering wheel). If there is no “User Code” already present in the system, the “Start/Stop” button will illuminate solid white. Pressing the “Start/Stop” button again for 2 seconds will start the engine. Once the engine is running, the “Start/Stop” button will illuminate solid red.

If a “User Code” is present in the system, the “Start/Stop” button will pulse white on and off and the LINC screen will prompt you to enter the “User Code.” Once the “User Code” is entered, the LINC screen will display a legal acknowledgement. After pressing “Accept,” press the “Start/Stop” button again for 2 seconds and the engine will start. Once the engine is running, the “Start/Stop” button will illuminate solid red.

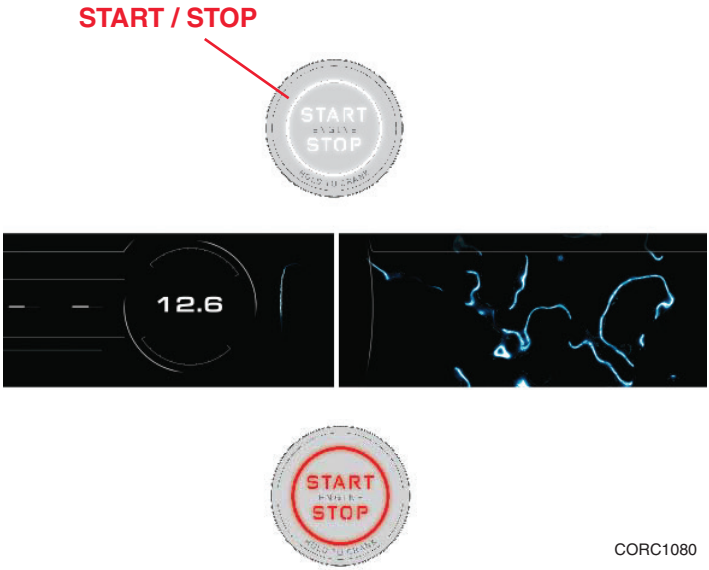

CORC1080

TURNING OFF YOUR BOAT

While the engine is running, a single press of the “Start/Stop” button will turn the engine off and the button light will illuminate solid white. If a “User Code” is not in the system, the LINC display and electronics will shut down. If a “User Code” is in the system, you will need to enter it into the LINC display and press the “Start/Stop” button to fully shut down the electronics.

NOTICE
To help prevent battery drain, make sure to press the “Start/Stop” button to shut down the electronics and then press the OFF button on the battery switch when you are finished using the boat.

MULTIPLE KEYLESS IGNITION CODES

The keyless ignition system has provisions for up to 10 different ignition codes. Any of these codes may be used to unlock or lock the system.

The “Master Embedded Code” is programmed into the system at Nautique Boat Company, Inc. It is not changeable and remains with the boat for life. This code can be used to unlock or lock the system.

NOTICE

Until a “User Code” is set in the system, the keyless ignition does not require the entry of a code to unlock the system or start the engine.

For detailed instructions on how to program a user code into the boat or erase an existing user code, refer to the Keypad Security menu on the Preferences page in your LINC manual.

FAIL SAFE MODE PROCEDURE

If the boat has a User Code programmed into the system and you cannot access the LINC display or touch screen controls, Nautique has created a “Fail Safe Mode” to allow you to enter your User Code. This procedure is described here and also in your LINC Manual.

USING HELM COMMAND IN FAIL SAFE MODE

The Helm Command buttons (in the driver armrest) will act as numbers to enter your User Code. Each button/knob will serve as a number starting with 0 and ending with 9. See the following illustration.

Helm Command Buttons

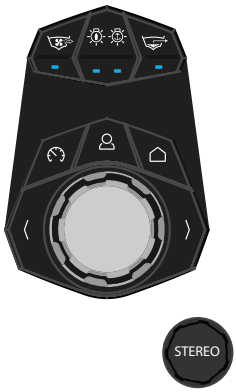

Activate Helm Command into Fail Safe Mode

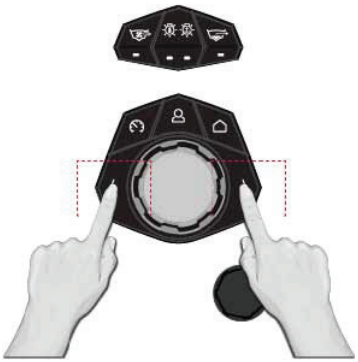

CORC1081

To enter Fail Safe Mode, press and hold the left and right arrow buttons together for 4 seconds. The “Start/Stop” button will be pulsing between white and off, and the lights on the Helm Command will begin to alternate red and white. Release the arrow buttons. You will now be able to enter your User Code by using the Helm Command buttons as numbers.

Blower = 0
Nav Lights = 1
Bilge = 2
Speed Control = 3
Users = 4
Home = 5
Left Arrow = 6
Rotary Knob = 7
Right Arrow = 8
Stereo = 9

Helm Command Buttons in Fail Safe Mode

CORC1082

The Helm Command buttons will automatically exit the Fail Safe Mode when it sees a valid User Code has been entered or when the battery switch is turned off.

STANDARD EQUIPMENT

WATERSPORTS TOW-POINT

The watersports tow-point (pylon) is manufactured from high strength aluminum alloy, engineered for durability. It is “hard coat anodized” and impregnated with a PTFE (teflon) material. If the pylon becomes loose, stop using the pylon and take the boat to your Nautique dealer for service.

⚠ WARNING

Misuse of the tow-point can cause death or serious injury. The pylon was designed for water skiing only. DO NOT use the pylon for parasailing, kite flying or towing other boats. DO NOT attach pylon extensions. Never sit behind the pylon where you might be in the path of the tow rope when the boat is pulling a skier.

⚠ CAUTION

Although pylon extensions and barefoot booms have become popular additions to many tournament inboards, Nautique Boat Company strongly objects and opposes the use of any pylon extension, whether up or to the side of any of its products. The use of pylon extensions can alter the handling characteristics of the boat, possibly resulting in dangerous instability, which could then lead to loss of control, a situation which could cause serious or fatal injury to the boat driver, passengers, skiers and anyone else who might be in the vicinity of such a mishap.

TOW ROPE ATTACHMENT – CENTER MOUNTED PYLON

SAFETY INSTRUCTIONS

Nautique recommends the following technique for attaching your tow rope to the tow pylon.

1. Locate the portion of rope where the increments are looped through one another at the skier's desired length.

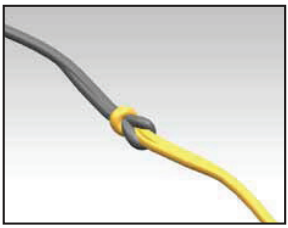

CORC0648

2. Loosen up the aft loop (closest to the skier, shown in orange).

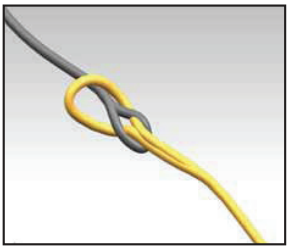

CORC0649

3. Slide only the loosened loop onto the pylon or tower.

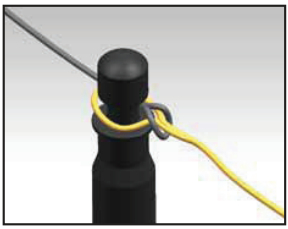

CORC0650

4. Tighten by pulling the tails of both the gray and orange sections of rope.

CORC0651

TOW ROPE ATTACHMENT – TOWER PYLON

SAFETY INSTRUCTIONS

Nautique recommends the following technique for attaching your tow rope to the tow pylon.

1. Locate the end of the wakeboard rope.

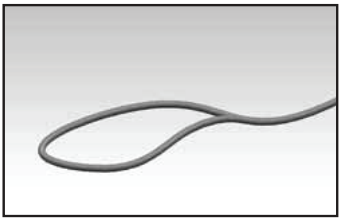

CORC0652

2. Pass a small section of the rope through the loop at the end as shown, creating another loop.

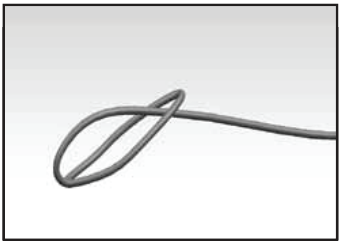

CORC0653

3. Slide the new loop onto the pylon or tower.

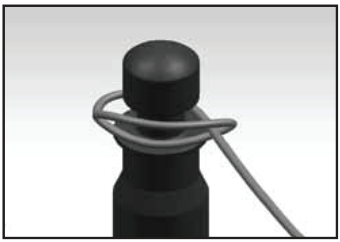

CORC0654

4. Tighten by pulling on the tail of the rope that leads to the skier.

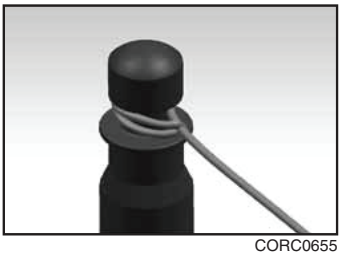

CORC0655

⚠ CAUTION

Nautique Boat Company DOES NOT approve of any structural changes, additions or modifications to our products. Any time a dealer or consumer makes a change to our product, they do so at their own risk and sole liability. Nautique Boat Company, Inc. will not be held liable for unauthorized changes, whether deletions or additions, to the original equipment/product manufactured and sold by Nautique Boat Company, Inc., even if such changes and additions are made by an "authorized" Nautique dealer, customer, promotional representative or any other person, known or unknown to Nautique Boat Company, Inc.

DRIVER'S SEAT ADJUSTMENT

The driver's seat can be adjusted forward and aft by pulling out on the handle (A) while sliding the seat forward or aft. To lock the seat in one of the preset positions, release the handle while sliding the seat. The spring in the handle will engage it into the next preset hole.

⚠ WARNING

A seat or seats which are not locked in position can cause death or serious injury. Lock the seat(s) in position (fore and aft) before operating the boat.

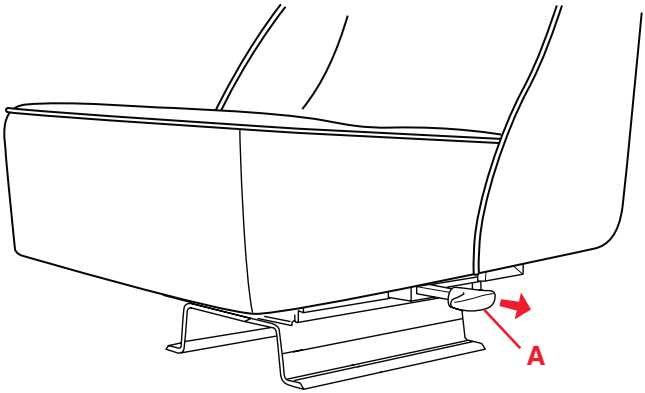

CORC0746

SKI NAUTIQUE MIRROR

The rearview mirror can be positioned on the windshield to observe a skier and traffic behind you. To reposition the mirror bracket on the windshield frame, loosen the three socket head screws and move the bracket to the desired location (see ***Figure A***). The center screw **(A)** should be retightened two turns, followed by the two outside screws **(B)** being tightened two turns. Follow this sequence until all three screws are tight.

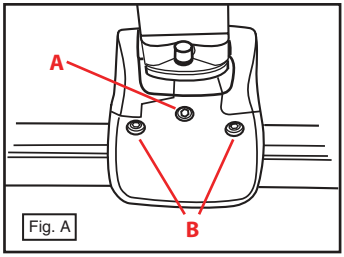

Fig. A

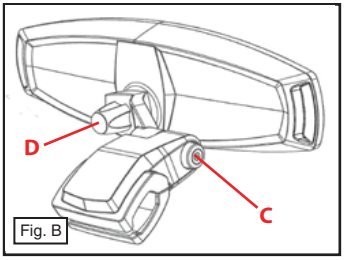

Fig. B

CORC1131

To raise or lower the mirror, press in on the mirror bracket knob **(C)** and hold while raising or lowering the mirror (see ***Figure B***). To adjust the mirror side to side, loosen the tension knob **(D)** on the back of the mirror arm, move the mirror to the desired position and retighten the knob (see ***Figure B***). Always lower the mirror when installing the mooring cover.

OBSERVER'S SEAT

Lift up on the bottom of the observer's seat cushion to access storage under the bow area. The seat cushion and seat leanback will hinge upward together.

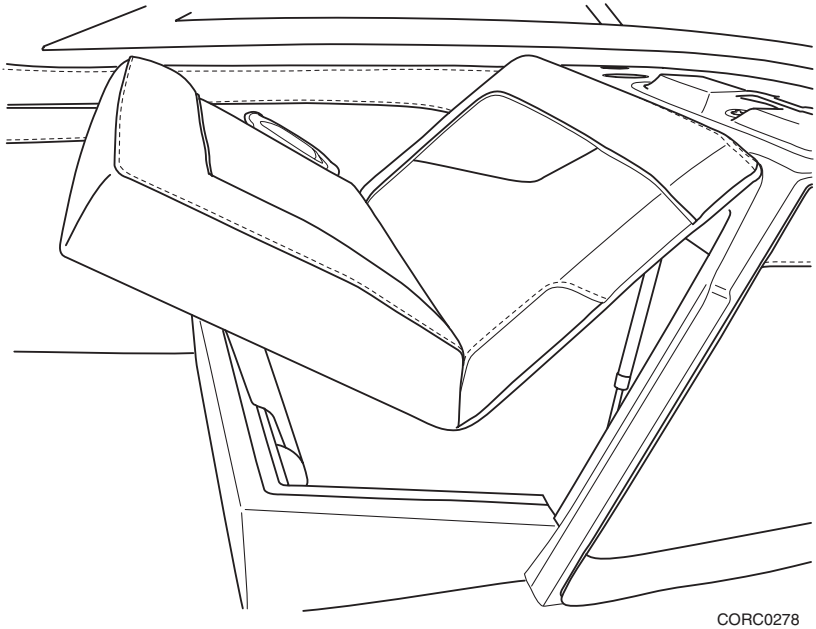

ENGINE BOX COVER

The engine box cover is designed as a one piece clam shell part. To open, lift up on the front pull handle **(1)**. You will feel resistance on the initial pull from the self-engaging plunger latches. After the plungers are disengaged, gas springs on the inside of the box will assist in opening the box fully. Access to the routine service items is now available.

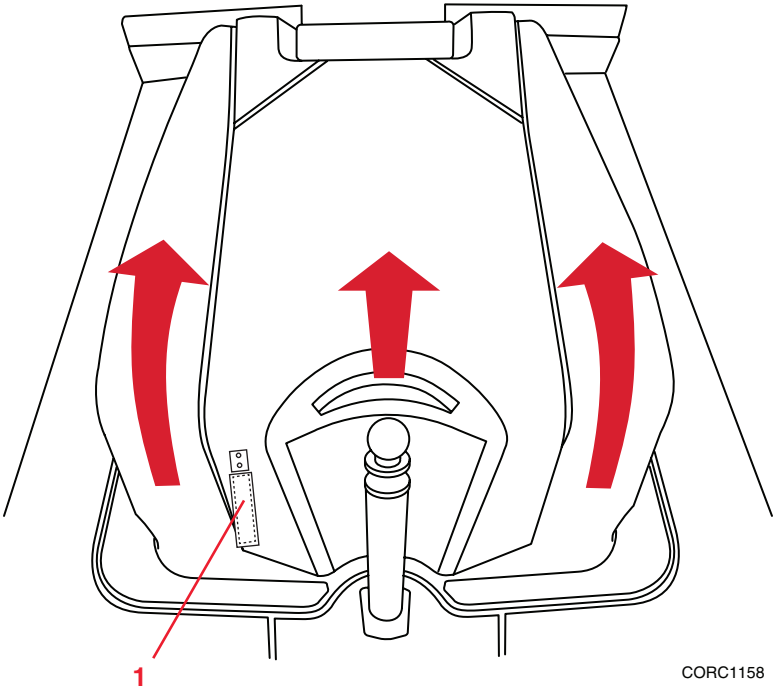

⚠ CAUTION

The engine box cover is heavy; be sure that all feet are clear of the box area when closing. Failure to do so may result in foot injury.

To close the engine box cover, use the pull handle to carefully lower the box back down to the floor. When down, slightly push down on the pull handle to ensure the plunger latches **(A)** engage.

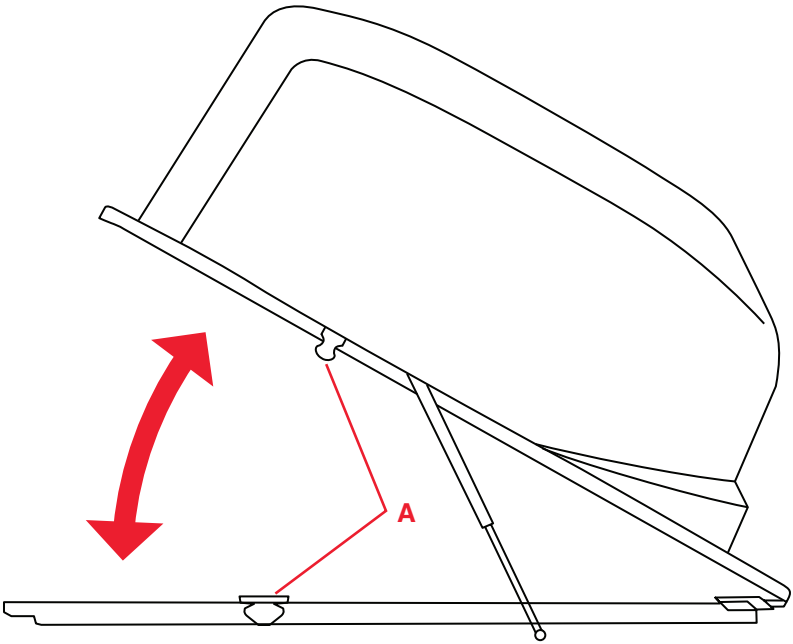

CORC0748

FIRE SUPPRESSION SYSTEM

Your Nautique boat is equipped with an automatic Fire Suppression System located in the engine compartment that is intended to sense the presence of fire and automatically disperse fire retardant chemicals.

In the event a fire occurs in the engine compartment, DO NOT open the engine cover.

If for any reason the automatic system fails to activate on its own, you can manually activate it by pulling the cable near the helm seat.

WALK-THRU WINDSHIELD OPENING/LATCHING

There are two latches on the inside starboard side of the walk-thru windshield. Rotate both of the window locks **(A)** to secure or unlock the window. Always have window closed and secured when trailering the boat.

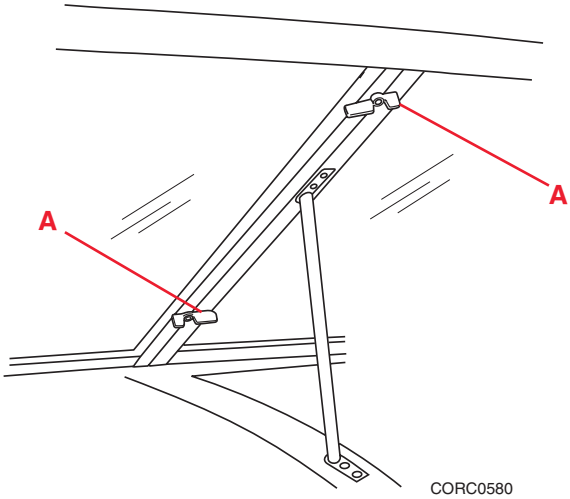

⚠ WARNING

An open window can cause death or serious injury. Make sure both window locks are secure when vessel is in motion.

DASH STORAGE

The dash storage is for dry storage only. It is equipped with a drain in the event of water intrusion.

BOARDING PLATFORM

The boarding platform of your boat is a convenient feature to enhance the watersports experience. There are serious safety concerns regarding the use of the platform. Nautique Boat Company, Inc. has placed warning labels at the driver's position, on the deck at the rear of the occupant area and on the transom. Refer to *Boating Safety on page 1-1* for more information.

To remove the boarding platform for storage or maintenance, pull the pins **(A)** located in the mounting brackets, under the platform, and lift the platform vertically.

⚠ WARNING

Always operate the boat with the boarding platform installed. The boarding platform is a safety feature that helps redirect engine exhaust (potentially containing carbon monoxide) away from the seating areas of the boat. It also covers metal appendages extending from the transom which are located under the boarding platform. Do not allow swimmers to go under the boarding platform or kick under the platform while swimming, as they may contact the metal appendages which may cause lacerations.

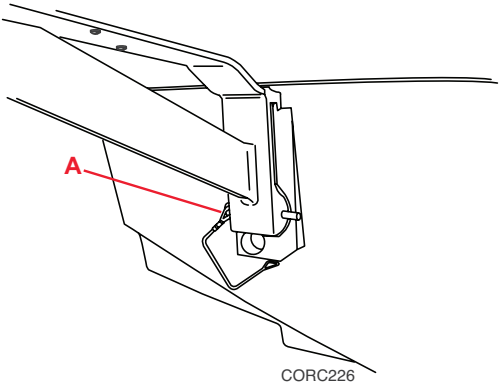

⚠ CAUTION

The maximum load on the boarding platform is 500 lbs (227 kg).

ENGINE COOLING WATER INTAKE VALVE

Your Nautique is equipped with a valve (seacock) on the engine cooling water intake. The handle is red and has a slide mechanism to prevent the valve from being shut off inadvertently. The valve is used to shut off the water supply in the event a hose failure or water leakage occurs. The valve is open when the red handle is in-line with the valve body, and the valve is closed when the handle is perpendicular to the valve body. Leave the valve open at all times unless an emergency condition requires you to close the valve to stop a leak or the possibility of a leak.

The valve is located on the starboard side of the transmission.

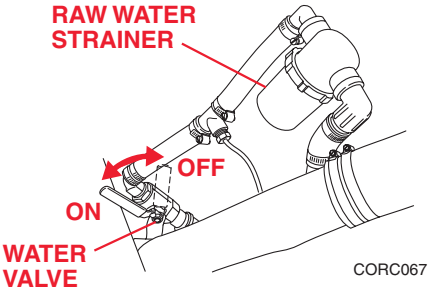

NAUTIQUE ELECTRICAL SYSTEM

To ensure proper electrical system boot up when using the battery switch, please wait at least 10 seconds after turning the switch on before entering the user code and starting the boat. Failure to do this can disrupt the Accessory circuit causing the LINC display, Stereo, Zero Off, and various electrical components not to turn on. If the operator accidentally disrupts the Accessory circuit, press and hold “Stop” for 2 seconds; then restart the system to regain functionality of the Accessory circuit and the components dependent upon it.

RUDDER REMOTE LUBE

The service allows for easy access to lubricating the rudder. The remote lube fitting is located under the engine box cover toward the starboard aft corner. Use a quality marine grease and gun. Connect the grease gun to the fitting and apply a light pressure to the gun until slight resistance is felt.

FUEL TANK

The fuel fill cap is located on the port side of the deck near midship. Press and release the black button on the bottom of the cap to open. Use caution when fueling your boat.

Avoid overfilling of the tank by monitoring the fuel level gauge while fueling. Turn on the ignition without starting the engine and monitor the gauge. Stop fueling as the gauge approaches the 'full' level and turn off the ignition when finished. Fuel spillage on our waterways will pollute our environment.

The fuel tank is located under the cockpit floor just in front of the engine. If you suspect there may be a fuel leak or any other fuel tank problem, contact your Nautique dealer and schedule a fuel tank inspection service.

⚠ WARNING

Explosion or fire can occur under certain conditions, causing death or serious injury:

- **Turn the engine OFF.**
- **DO NOT smoke or allow open flame or sparks within 50 feet (15 meters) of the refueling area.**
- **DO NOT refuel unattended, avoid contact and spilling.**
- **DO NOT refuel indoors.**
- **DO NOT use a plastic funnel.**
- **DO NOT allow any spilled fuel to remain on your boat's finish.**
- **DO NOT allow a fuel system problem to go unchecked.**
- **Always maintain contact with the fuel nozzle and the fuel tank to prevent electrostatic spark.**

OPTIONAL EQUIPMENT

SKI NAUTIQUE BIMINI

CORC1165

To Raise the Bimini

CORC1166

Figure 8

Lay the bimini over the bow with the support poles facing aft. Engage the aft support poles into the aft deck receivers ***(Figure 8)***.

CORC1167

Figure 9

Unzip and remove the bimini cover boot. Adjust the forward support poles to the fully extended position and engage them into the forward deck receivers ***(Figure 9)***.

CORC1168

Figure 10

Rotate the bimini to the fully up position. Push up on the center tension rod until it clicks. It will lock into position ***(Figure 10)***.

CORC1169

Figure 11

Cover the center tension rod with the velcro strap ***(Figure 11)***.

CORC1170

Figure 12

To Lower the Bimini

Undo the velcro strap covering the center tension rod ***(Figure 12)***.

CORC1171

Figure 13

Press the paddle on the center of the tension rod to release it. Use the black clip to secure the center tension rod to the frame. Fold the bimini and lay it back ***(Figure 13)***.

CORC1172

Figure 14

Release the forward support poles by pressing down on the deck receiver collar and pulling the support rod end out ***(Figure 14)***.

Telescope the front support poles to the shortest position and clip them to the bimini frame ***(Figure 14)***.

CORC1173

Figure 15

Leave the aft support poles engaged onto the deck receivers. Install the boot cover. The bimini can either lay in front of the windshield or behind it. The mooring cover will fit over the boat with the bimini in either stowed position ***(Figure 15)***.

It is recommended to stow the bimini in the front of the windshield if the boat is being stored for long periods of time.

NOTICE

The bimini must be in the stowed position or removed when towing the boat on roadways.

MOORING COVER INSTRUCTIONS

⚠ WARNING

To prevent damage to your boat and/or cover, please read and understand the instructions before attempting to use the cover.

Features:

1. A special anti-pooling system is included to prevent large puddles from ruining your cover.
2. The SurLast® all-weather fabric allows stability, water repellency and breathability.
3. The Vacu-Hold™ system allows trailering at highway speeds (65 mph) without billowing or buffeting.
4. The ratchet and drawstrap-type attachment allows easy, tight and secure installation.

Care Instructions

Wash the cover with warm, soapy water (while installed if possible) and allow it to air-dry. For stubborn stains, use mild detergent. Over time dirt and grime can build up on the cover and may dirty your vinyl. We suggest using a product such as Mr. Clean Magic Eraser to aid in removing this type of staining. Storing the boat in constant direct sunlight will shorten the life of the cover and the components used to construct it. Store the boat in a location that exposes it to some sun and also shades it throughout the day, preferably morning sun and afternoon shade. Refer to www.commercialsewing.com/careanduse for more information.

NOTE: *As a preventative measure, periodically apply a no-seize type lubricant in the barrel of the ratchet, as indicated in the following image.*

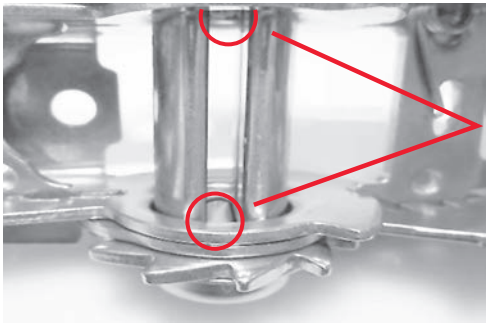

CORC0729

Mooring Cover Installation Instructions

Place the cover on the boat starting at the front. Fold the driver mirror to the lower position and maneuver the cover in place as you work your way to the back of the boat. The bottom of the cover should extend just below the boat rub rail.

CORC0954

With the cover placed evenly around the boat and the buckles snapped closed at the tower base, unzip the ratchet strap pockets on the back of the mooring cover. Ratchet the strap, rotating from port ratchet to starboard ratchet, until the strap is tight.

⚠ CAUTION

Readjust and retighten the cover after trailering and before storage. To prevent pooling, do not allow snow and ice to accumulate on the cover.

Never trailer at speeds above the speed limit.

NOTICE

Proper installation and operation of this cover requires that it be very tight at the gunwale. Retighten it as necessary before, after and during stops while trailering.

BE SURE the cover is installed below gunwale before final ratchet adjustment. ZIP the ratchet pocket closed for final installation.

⚠ WARNING

The zippered ratchet mechanism should be hand-tightened only. Do not pry or attempt to operate ratchet mechanism with any type of tool.

Warranty

If you have any questions about the warranty coverage for your mooring cover or if you have any concerns about the functions of your mooring cover, please contact your dealer or call Commercial Sewing Customer Service directly at (860) 482-5509.

BATTERY CHARGER

Nautique offers battery charging systems for single- and dual-battery applications. The exact battery charger model required for your boat will depend on the number of batteries your boat is equipped with and the specific electrical requirements from the country in which your boat will be operating. Because of the wide variance in electrical plug configurations used in each country, all boats built for use outside the United States will require your Nautique dealer to install the proper electrical plug on the battery charger AC supply cord. Your Skippers Kit will contain a manual from the battery charger manufacturer that explains the proper wiring requirements for each system as well as instructions for safe operation of the charger.

OPTIONAL ACCESSORIES

STEREO SYSTEMS

All Nautique boats have been built stereo ready with power wires for head unit and cockpit speakers. An optional Digital Remote Control can be mounted on the transom of the boat to provide all necessary stereo control functions at your fingertips. See your Nautique dealer for the stereo configuration for your boat.

The audio speakers of your Nautique boat are designed to deliver maximum fidelity in a marine environment. The speakers can be damaged if struck by a sharp object or if the moving elements are restricted from movement. Do not store or place any sharp objects near the speakers, or restrict element movement.

Optional accessories are available from your Nautique dealer. Your dealer may have a wide range of other accessories available to enhance your watersports or pleasure boating experience. Contact your Nautique dealer for more information.

NOTES

NAUTIQUE

Section 4
Boat Systems

Knowing the systems, controls and indicators on your boat is essential for safe and proper operation.

WARNING

Systems which are not inspected regularly or maintained can cause death, serious injury or damage to product. Inspect and maintain all systems to prevent unexpected hazards associated with worn or faulty components.

When replacement parts are required, use marine grade parts with equivalent characteristics, including type, strength and material.

Marine grade parts are designed specifically for the conditions and environment they are exposed to. Using substandard parts could result in injury and product failure.

FUEL SYSTEM

The fuel system consists of a built-in fuel tank, a fuel fill and a fuel tank vent.

The fuel tank is located under the cockpit floor just in front of the engine. If you suspect there may be a fuel leak or any other fuel tank problem, contact your Nautique dealer and schedule a fuel tank inspection service.

SKI NAUTIQUE

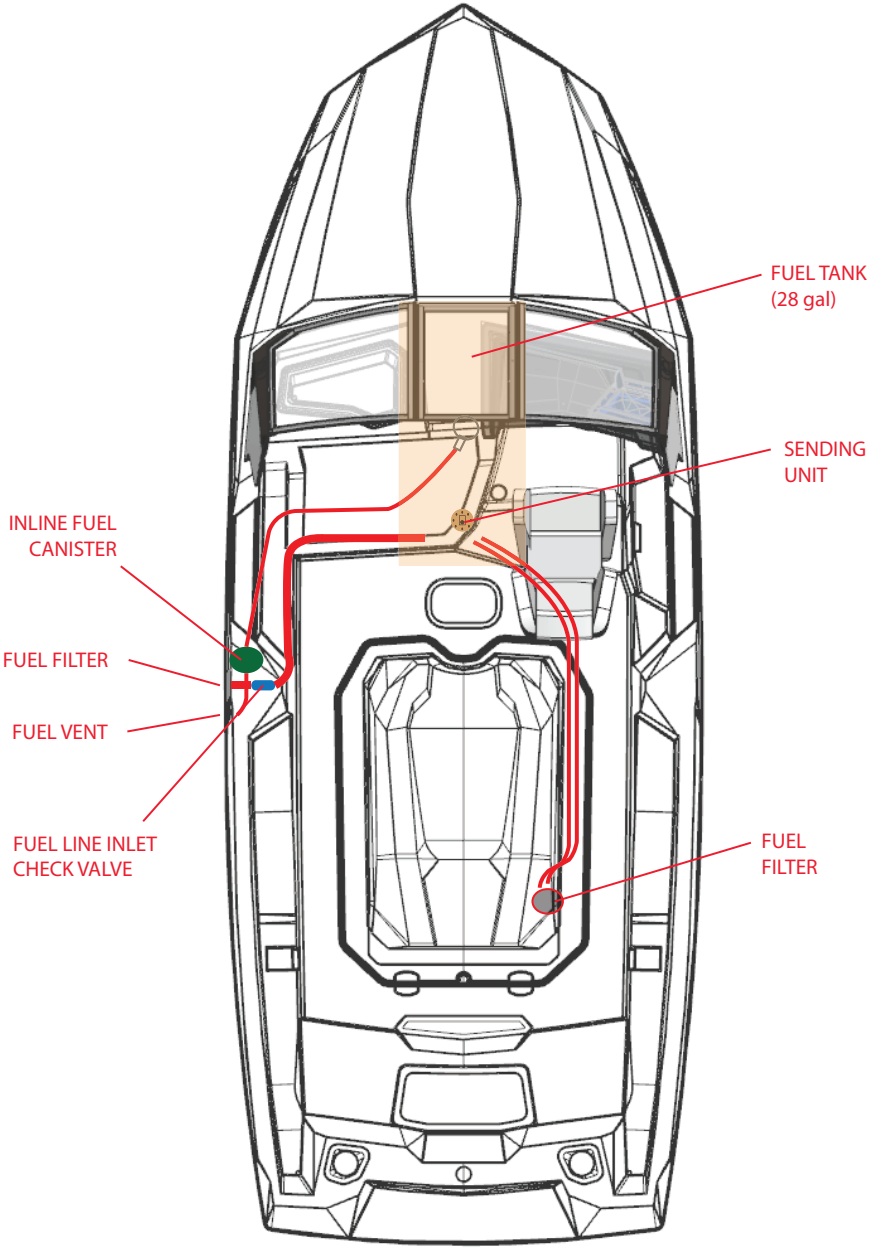

BILGE SYSTEM

NOTICE

The Federal Water Pollution Control Act prohibits the discharge of oil or oily waste into the water. Violators can be fined $5,000.00.

Do not allow water to accumulate in the bilge area of your boat. When the boat is in use, make sure the bilge pump is turned on. The bilge pump removes excess water from the bottom of the boat. When the bilge button is displaying a solid light, the pump has power and will automatically check for the presence of bilge water every three minutes. If the pump detects water, it will run until it no longer detects water. To reset the three-minute cycle, press the bilge button to turn it off, then press the bilge button to turn the pump back on.

The bilge pumps will not drain significant power while automatically cycling to detect water. Each bilge pump also has a backup float switch. This float switch will turn on the pump if there is excessive standing water in the bilge whether the battery switch is on or off.

⚠ CAUTION

The risk of personal injury from excess water in the bilge area will adversely affect the handling and maneuverability of the boat. Also, damage to the engine and other parts of the drive system can occur from the additional water. DO NOT allow the bilge pump to operate after all the water has been cleared from the bilge area, damage to the pump will occur.

European market boats include filters in the bilge drain hoses. These filters are designed to reduce the amount of contaminated bilge water being drained into waterways. The filters are installed in the bilge pump drain hoses. Refer to ***Ski Nautique Deck Layout on page 2-4*** for model-specific locations. Follow the filter manufacturer's recommendations on when they must be replaced.

Refer to ***CE Bilge Discharge Filter on page 7-4*** for more information regarding bilge filters.

AQUATIC INVASIVE SPECIES (AIS)

KC-6027

Aquatic Invasive Species (AIS) are plants and animals that occur in waters in which they are not native and whose introduction causes or is likely to cause economic or environmental damage or harm to human health. AIS have a negative impact on the waterway, its native species, and recreational and commercial uses of the waterway. As responsible boaters and citizens, each boat owner should do their part to prevent the spread of these aquatic hitchhikers.

In many cases, it is also required by law. Check local regulations for any waterway where you will boat.

After each boating trip, follow these three simple steps before you leave the water access to stop the spread of AIS: Clean, Drain, and Dry. This is the boater's way to help protect the environment from the damage that AIS can cause.

Clean

- Inspect and remove all aquatic plants, animals, mud, and debris from the boat, engine, trailer, anchor, and any watersports equipment.
- Rinse, scrub or wash, as appropriate, away from storm drains, ditches, or waterways.
- Rinse watercraft, trailer, and equipment with hot water, when possible.
- Flush motor according to owner's manual.

Drain

Completely drain all water from the boat and its compartments, including but not limited to the bilge, wells, lockers, ballast tanks or bags, and engines.

Dry

Allow the boat to completely dry before visiting any other bodies of water. Water-borne organisms cannot survive long periods of dryness.

NOTE: *Some localities may require inspection or decontamination before and/or after launching. Check state and local laws and regulations for requirements prior to traveling to go boating.*

BALLAST SYSTEM – SKI NAUTIQUE

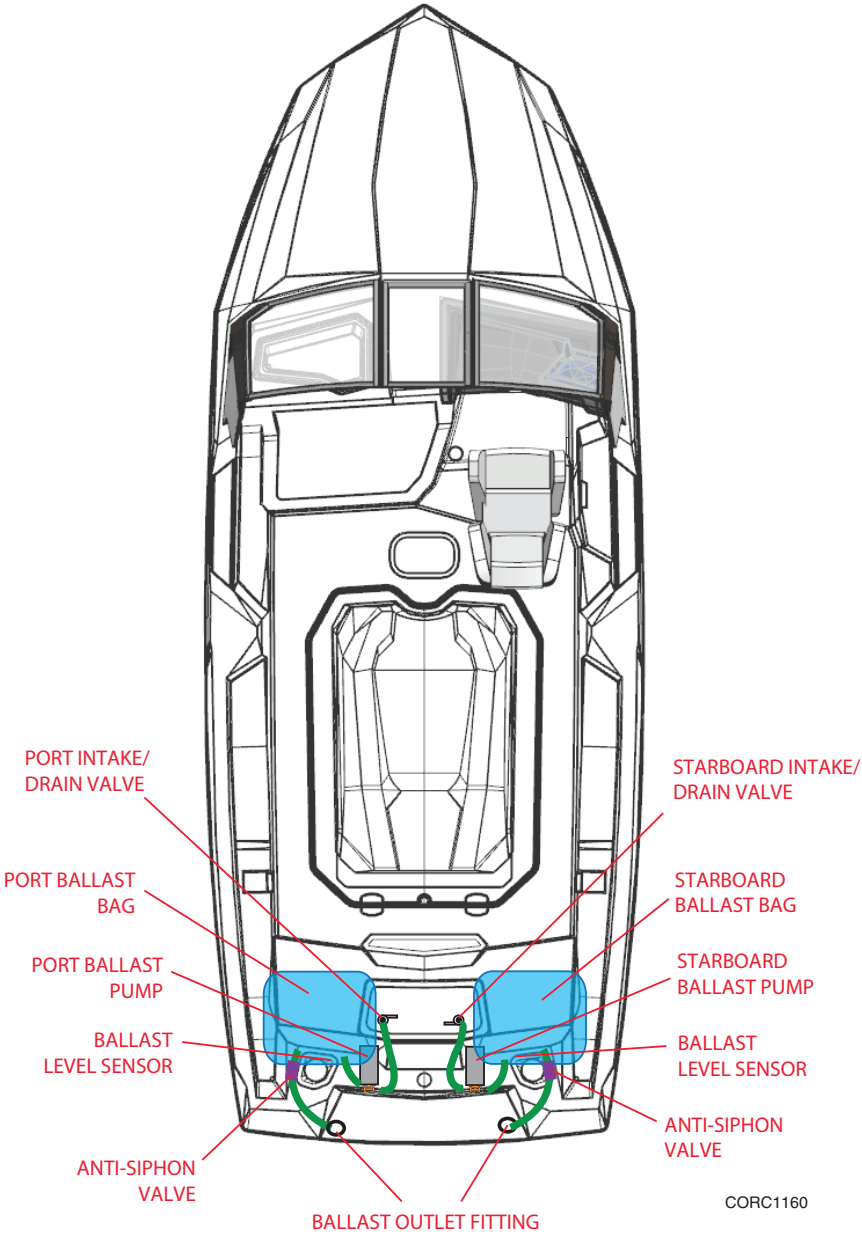

BILGE SYSTEM – SKI NAUTIQUE

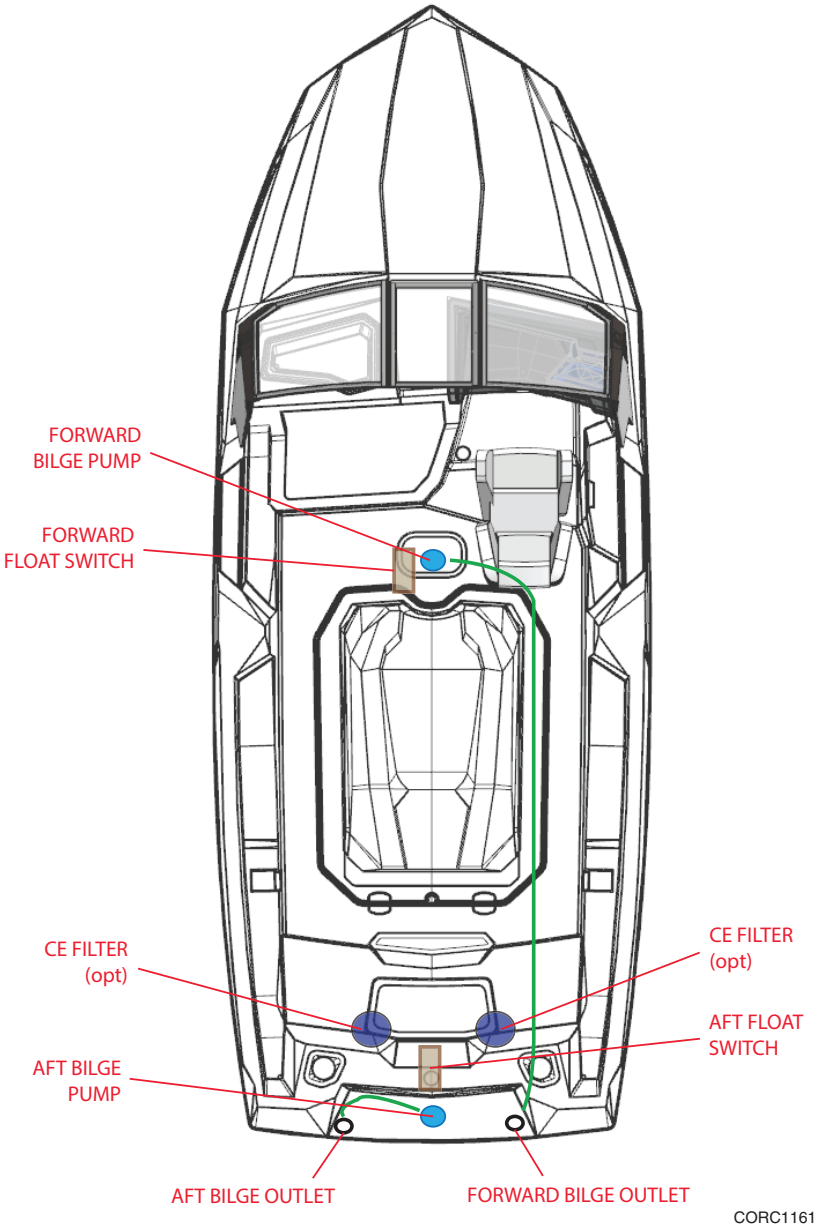

12-VOLT SYSTEM

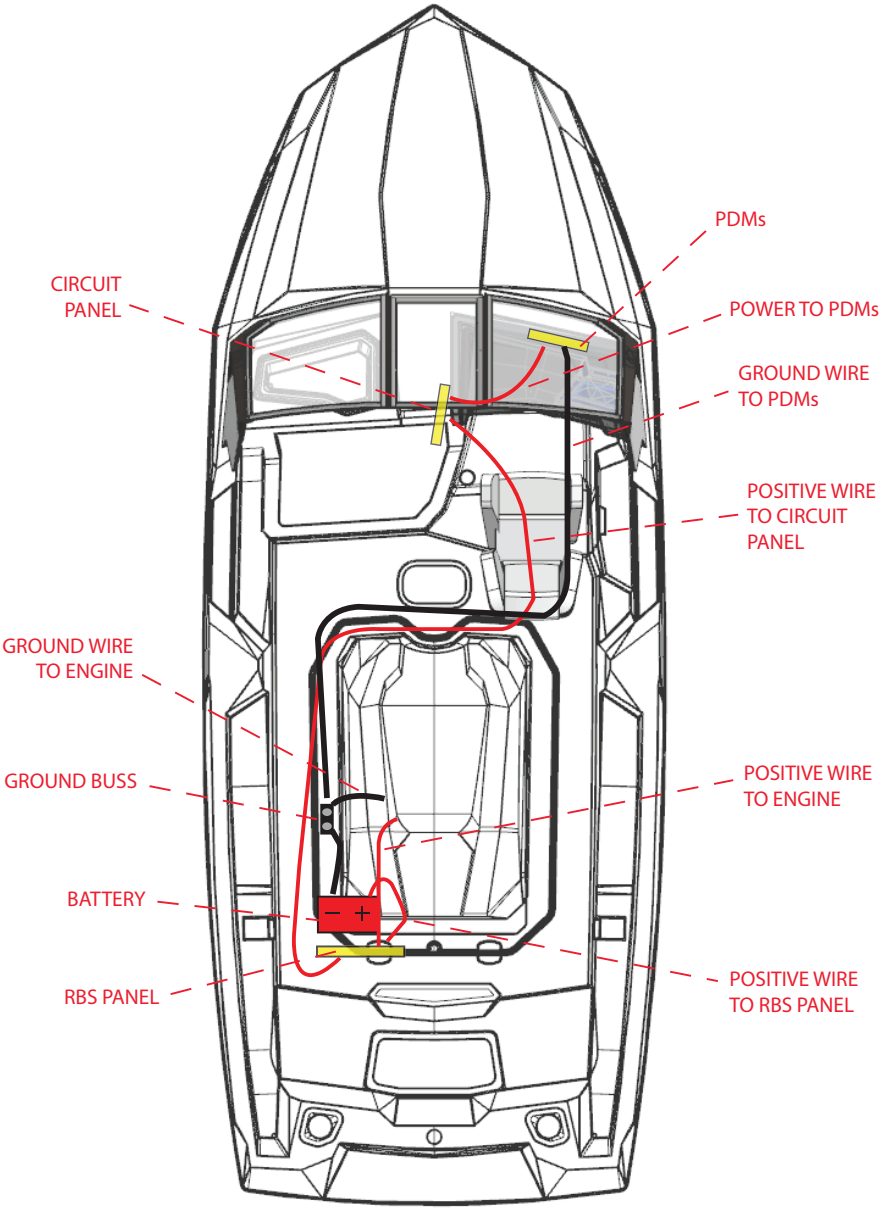

COCKPIT HEATER SYSTEM – OPTIONAL

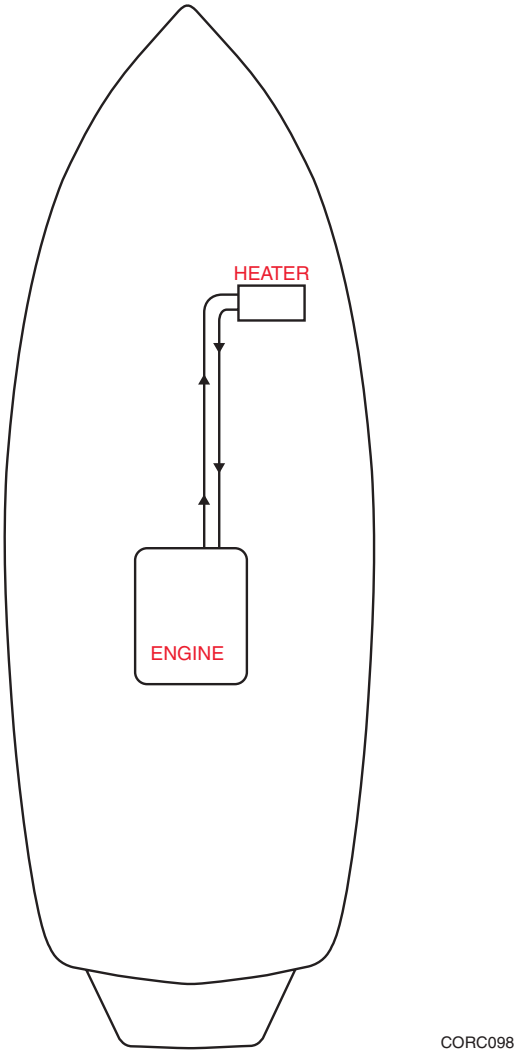

The heater system has a heating core, ducts, diffusers and a high-speed fan to deliver heat to the cockpit and windshield. The duct diffuser at the windshield can be closed and rotated to direct air flow. The floor ducts can also be closed to control air flow. The aft duct and diffuser can be pulled out of its socket to direct flow in other locations of the cockpit. The heating unit is located under the driver's dash pod.

NAUTIQUE

Section 5
Getting Underway

There are many things to consider to make your boating trip safe and enjoyable. You are responsible for the safety of all passengers, the boat and any damage the boat or its wake may cause. Keep passengers from blocking your view so that you do not run into other boats, swimmers, water skiers, personal water vehicles or aids to navigation.

SAFETY CHECKLIST

WARNING

Operating the boat if any problem is found during this inspection can cause death or serious injury. DO NOT operate the boat if any problem is found during this inspection.

Problems found during this inspection should be handled by your Nautique dealer, if not easily remedied by the user.

The following checks are essential to safe boating and must be performed before starting the engine.

- Check the weather report, wind and water conditions.
- Check that required safety equipment and PFDs are on-board and in proper operating condition.
- Check that the fire extinguisher is fully charged.
- Be sure the boat is not overloaded.
- Be sure the operator's visibility is not obstructed.
- Check that all maintenance has been performed.
- Raise the engine cover and smell for the presence of fuel vapors. If fuel vapors are detected, DO NOT OPERATE BOAT until the source of the vapors has been identified and corrected by a qualified Nautique Dealer service technician.

SAFETY EQUIPMENT

Federal and local laws require certain safety equipment to be on-board at all times. In addition, responsible boaters carry other equipment in case of emergency. Check with local boating authorities for any additional requirements over and above the federal requirements.

FUELING

⚠ DANGER

Explosion or fire hazard. Gasoline is extremely flammable and highly explosive under certain conditions. Turn the engine OFF and DO NOT smoke or allow open flames or sparks within 50 feet (15 meters) of the fueling area. Check your boat for fuel leaks and fumes before, during and after each use. Maintain contact between the fuel nozzle and the fuel tank to prevent electrostatic spark. DO NOT use a plastic funnel.

⚠ CAUTION

To prevent engine damage not covered by warranty, refer to your engine operation and maintenance manual for recommended fuel type and octane rating.

Take care not to spill gasoline. If gasoline is accidentally spilled, wipe up all traces of it with dry rags and immediately dispose of the rags properly ashore. Spilled fuel may “yellow” the gelcoat finish and damage gunwale trim.

GASOLINE CONTAINING ALCOHOL

⚠ CAUTION

DO NOT use any gasoline that contains METHANOL. This fuel is very corrosive and will create unsafe operating conditions to the boat's fuel system and serious damage to the engine. Any engine damage caused by the use of methanol will not be covered by the engine's warranty.

The implementation of ethanol-based fuel is spreading rapidly throughout the United States. As such, PCM Engines and Nautique provide the following information regarding the use of this fuel. This information addresses the use of ethanol fuels in PCM Engines and Nautique Boats.

⚠ CAUTION

Use of ethanol blended fuel rated E10 or less is acceptable. DO NOT use fuels rated higher than E10. Ethanol fuels rated higher than E10 could potentially damage the engine and/or present an unsafe boat fuel system. Damage to the engine resulting from the use of ethanol fuel rated higher than E10 IS NOT covered by the engine's warranty.

If ethanol blended fuel rated E10 or less is used, or if the presence of alcohol is uncertain, inspections and service of the complete fuel system are required more frequently. Any sign of fuel leakage or deterioration must be repaired immediately before further engine operation. It is also important to know that ethanol blended fuel will act as a solvent and will attract and hold moisture.

NOTICE

Fuel system or engine damage caused by contamination from water, foreign particles, sludge, or gums entering or forming in the fuel system is not covered by the engine's limited warranty.

Without proper fuel filtration or fuel stabilization, ethanol blended fuel may cause the following:

- Excessive moisture (water) can cause lean operation, hard starting, and operating difficulties such as vapor lock and low speed stalling, and can reduce fuel shelf life.
- Ethanol blended fuels acting as solvents can cause gum, sediment, sludge and other particles to be loosened and carried through the fuel system to the engine.

FUEL STABILIZER RECOMMENDATIONS FOR ETHANOL BLENDED FUELS

The use of a commercially available fuel stabilizer, such as STA-BIL®, is recommended when storing ethanol blended fuel for more than two weeks.

WHEN FUELING:

1. Avoid fueling at night, except under well-lighted conditions. Also avoid overfilling of the tank by monitoring the fuel level gauge while fueling. Turn on the ignition without starting the engine and monitor the gauge. Stop fueling as the gauge approaches the 'full' level and turn off the ignition when finished. Fuel spillage on our waterways will pollute our environment.
2. Moor your boat securely to the dock. Know the location of the fire extinguisher in case of emergency.
3. Close all doors, hatches, windows and other compartments.
4. Extinguish cigarettes, pipes, and all other flame producing items.
5. Make sure all power is OFF, and DO NOT operate any electrical switches.
6. Add fuel in accordance with the engine operator's manual. DO NOT overfill, and allow enough room for fuel expansion.
7. Refer to the engine operator's manual for correct octane level recommendations for your vessel's engine type.

AFTER FUELING:

1. Tighten the fuel filler cap. Wipe up any spilled fuel.
2. Check all fuel lines, hoses and connections for leaks and deterioration.

NOTICE

Each time you refuel, inspect all fuel lines, hoses and connections for leaks and deterioration.

BOARDING

When boarding the boat, always step in. DO NOT jump. Avoid stepping on fiberglass or other potentially slippery surfaces. Board one person at a time.

DO NOT board the boat while carrying gear. Set the gear on the dock, board the boat and then pick up the gear.

Use the boarding platform to board from the water. To prevent injury, make sure the engine is OFF when swimmers, divers and skiers are boarding or even near the platform.

BOAT PLANING

The performance of your Nautique boat depends on load weight and distribution. DISTRIBUTE WEIGHT EVENLY, from bow to stern, and also from port to starboard.

If your boat is equipped with a ballast tank or loaded, loss of horizon may occur when you begin to plane your boat. Get on plane immediately to restore the vision of your path. DO NOT operate your boat if the loss of horizon prevents you from operating it safely.

⚠ WARNING

Overloading of passengers, personal equipment and supplies could result in an accident, especially in rough waters.

PRE-OPERATION CHECKS

It is the owner's responsibility to check all of the items listed below to be certain all preparation steps are completed before you use your boat. Checking these items periodically will soon become a habit. If leaks or other abnormal conditions are found, stop using the boat and contact your Nautique dealer to have the problem corrected.

Get into the habit of performing these checks in the same order each time so that it becomes routine.

- Make sure to check all safety items.
- Check that drain plug is properly installed.
- Check condition of propeller.
- Check that all batteries are fully charged and at the proper level.
- Verify the amount of fuel in the fuel tanks.
- Be sure the lights, horn, bilge pumps and other electrical equipment are in operating condition.
- Check that all navigation lights are in working order and have not exceeded the manufacturer's recommended replacement life (25 years from the date the vessel was manufactured).
- Check that steering system operates properly.
- Make sure your float plan is submitted to a responsible person.
- Refer to your engine operation and maintenance manual for additional pre-operation checks.

The following instructions are very important:

- Raise the engine hatch all the way up. Check to see if all the engine drain plugs are in place. Make sure the hull drain plug T-handle in the bilge area is installed.
- Look at all the hoses to make sure they are installed and the hose clamps are tight. Close the engine hatch and turn on the engine compartment blower. Run the blower at least four minutes to remove fuel vapors that might be in the bilge area and engine compartment before starting engine. Remember, if you have detected the presence of fuel vapors, do not start the engine until the source has been determined, problems corrected and vapors removed.
- **Check all gasoline line connections.** Connections are located at the fuel tank, the fuel control cell and the fuel injection system. All Nautique boats are equipped with anti-siphon valves on the outlet fittings of the fuel tanks to reduce the chance of fuel siphoning from the fuel tank if a fuel hose leaks or is severed.
- Fill the fuel tank and check for leaks. Check again for leaks after the engine has run for a few minutes.

Checklist before starting boat:

1. Engine oil level - boat must be level.
2. Transmission oil level - boat must be level.
3. Shifting linkage and detent in forward, neutral and reverse.
4. Leaks (water, fuel and oil).
5. Coolant level (closed cooling system).
6. Operation of the throttle and transmission shift control.
7. Battery condition.
8. Visually inspect for any loose mounting fasteners.
9. Verify the emergency stop switch located by the throttle is fully functional and the lanyard is not frayed or damaged. Clip the safety lanyard securely to your body. Keep it attached at all times while you are driving.
10. Check that the engine cooling water (raw water) valve is open and raw water strainer is clean.

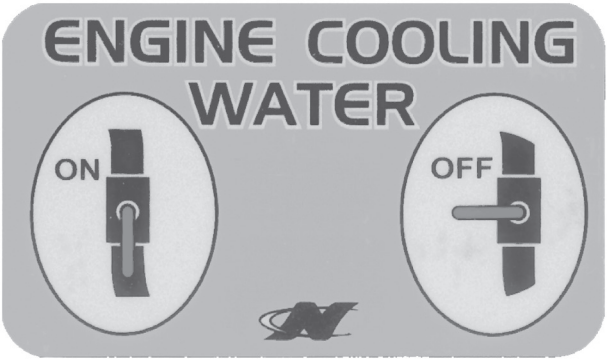

CORC015

- Once the boat is in the water, visually check all hull bottom components for leaks (i.e., shaft dripless packing gland, ball valves, sensors). If leaks are suspected, pull the boat out of the water and have your Nautique dealer service the boat.

- Make sure there are no ropes, gear bags, arms/legs near the belts and pulleys of the engine. Severe injury can result by becoming entangled in the belts of the engine while it is running. Make sure the boat is deep enough in the water to supply the water intake with water to cool the engine. Move the throttle into the NEUTRAL “straight up” position.

⚠ WARNING

Fire or explosion hazard CAN OCCUR from fumes accumulating in bilge area. Ventilate the engine compartment by running the blower for four minutes, especially after repairing or refueling and check for fuel spills or leaks.

- Close the engine cover.

⚠ WARNING

An engine guard which is not in place or contact with any moving parts can cause death or serious injury. The engine box cover is a machinery guard. DO NOT operate your boat without the cover closed and in place unless you are performing a check or maintenance. Keep your hands, clothing, hair and any other body parts away from any moving parts.

- Start the engine.

During normal operation of your boat you can help prevent personal injury to yourself and others by keeping the engine cover closed while the engine is running.

- DO NOT operate the engine with the engine cover open or while someone is in the area of an open engine cover.
- DO NOT open the engine cover unless the engine is turned OFF and rotating parts are stationary and remain in a stationary position.

IT IS RECOMMENDED THAT ALL WORK ON THE ENGINE BE DONE BY TRAINED AND QUALIFIED SERVICE PERSONNEL.

During the warm up period, check the gauges for correct and normal operation of all the systems:

- Oil pressure 35-80 psi, approximately at 2000 rpm
- Cooling water flow and water temperature 140-170°
- Volts should rise to around 13-14V or higher
- Idle rpm (600-700) in gear

⚠ CAUTION

DO NOT operate at high rpms in NEUTRAL.

DO NOT shift into forward or reverse at engine speeds above idle rpms.

DO NOT operate the engine without a cooling water supply.

Damage to the water pump impeller and engine can occur. If the engine does not start, refer to Section 8 Troubleshooting.

If the engine does not start:

- If the fuel filter has been changed or if the fuel system was run dry, it will be necessary to cycle the ignition start button from the STOP position to the START position several times until the fuel pumps build adequate pressure. The cycling of the ignition is necessary because the fuel pumps will run only one to two seconds when the ignition is turned on, unless the engine starts. Keep the shifter/throttle control in NEUTRAL when starting the engine. If the throttle is advanced, the computer will think the engine is flooded and initiate a “clear flood” condition which will shut off fuel to the engine and not allow it to start. The idle speed increase is normally on hot or cold starts. This is programmed into the computer. When the engine starts, the idle speed will jump to approximately 1,500 rpm and quickly decrease to between 750 and 900 rpm.
- Check for gasoline and cooling water leaks on the engine.
- Check for cooling water circulation (look at the raw water strainer at the rear port side of the engine for water movement).

FLOODED ENGINE

If your engine does become flooded, use caution when attempting to start the engine. Push in the Shift Override Button located near the throttle arm and advance the throttle to the FULL THROTTLE position. By pushing the button in, the shift linkage is disengaged and the transmission remains in NEUTRAL during the starting procedure. If the engine fails to start after 30 seconds, allow the starter to cool before retrying.

When the engine starts, move the throttle lever back until the engine is running about 2,500 rpm or less. Check the gauges for normal readings and let the engine run for a minute to burn the excess fuel. If the gauge readings are abnormal, stop the engine and contact your Nautique dealer. When the engine runs normally, check the engine for fuel, water and exhaust leaks. If there are leaks, stop the engine and correct them before you continue.

After your initial run:

- Check the engine oil level
- Check the transmission oil level
- Check for leaks (water, fuel and oil)
- Check that engine frame bolts and mounts are tight
- Check that throttle and shift control operates correctly

NOTICE

If the engine backfires when you try to start it, the problem may be more serious than flooding.

- *DO NOT CONTINUE TRYING TO START THE ENGINE.*
- *CONTACT YOUR NAUTIQUE DEALER OR A QUALIFIED TECHNICIAN TO CORRECT THE PROBLEM.*

DO NOT keep trying to start the engine under these conditions. Engine damage or personal injury can result.

BREAK-IN PROCEDURE

Make sure all your passengers are properly seated before starting the break-in procedure. After the engine is thoroughly warmed up and you have driven the boat into a large open area, advance the throttle to wide open until the maximum rpms are reached. DO NOT exceed 5,000 rpm. Reduce the throttle to 2,800-3,000 rpms and cruise at or below this speed for 30 minutes. Reduce the speed to idle, advance the throttle to wide open and operate at that speed for one minute; reduce to the previous cruising speed for a few minutes and repeat. Accelerating from idle speed to wide open assists in seating the piston rings. This cycle can be repeated from time to time during the first five hours of operation. DO NOT operate engine at full throttle for longer than one to two minutes.

⚠ CAUTION

Follow these procedures only when conditions are such that you can drive the boat safely. DO NOT attempt to break in an engine by letting it idle at the dock.

We suggest you bring your boat back to your Nautique dealer after 25 hours of operation for an inspection of the shaft alignment, stuffing boxes adjustment, and the fuel system checked for leaks. This is not a free service. Follow Pleasure Craft Marine's (PCM) recommendations in the maintenance section for additional service to the engine. Consult your Nautique dealer to determine what charges will apply.

PROPELLER SELECTION

The maximum rpm of the engine at full throttle under normal load conditions can be controlled by propeller pitch, diameter and design. It is essential the propeller does not underload or overload the engine.

Propeller Overloading, results in low rpms at wide open throttle will give poor performance, poor fuel economy and eventually result in engine damage.

Propeller Underloading, if operated with a propeller that has too little pitch or diameter, poor performance will result.

NOTICE

Running your boat in shallow water can cause propeller shaft, strut, propeller and rudder damage and sand and silt to be pulled into the cooling system. This will cause excessive water pump wear and can clog the water passages in the engine. Heavy weed growth in the water can plug the raw water strainer and oil coolers and cause engine damage. There is a raw water strainer located near the rear of the engine to strain the water before it goes into the transmission cooler and then the engine. Check this every time you use your boat to make sure it is not clogged.

Refer to ***Hazardous Conditions on page 1-37***.

If the engine fails to start or is not operating properly, contact your Nautique dealer for assistance.

SHIFTING

⚠ WARNING

Boat movement without making sure your path is clear can cause death or serious injury. Make sure there are no swimmers or obstacles in the water near you.

Keep the control lever clean and clear of obstructions. Refer to your engine operator and maintenance manual for shifting information.

Always pause in NEUTRAL before shifting from reverse to forward and from forward to reverse.

STEERING

Practice steering your boat. Make sure the steering system is working correctly and is properly maintained.

⚠ CAUTION

The steering system must be in good operating condition for safe boating. Frequent inspection, lubrication and adjustment by your Nautique dealer is recommended.

STOPPING

Stopping the engine immediately after operating at high speed is not recommended. Allow the engine a two to three minute cool-down period at idle or low speed.

Refer to your engine operator and maintenance manual for stopping information.

DOCKING

⚠ WARNING

There is a crushing hazard between the boat and other objects that could cause death or serious injury. DO NOT use your hands, arms or another part of your body to attempt to keep the boat from hitting other objects, especially a dock.

Approach a dock slowly and use caution. Plan your maneuvers ahead of time. Allow wind and current movement to help maneuver your boat.

Come to a stop a short distance from the dock, then proceed slowly.

- Have your fenders and mooring lines ready.
- Observe how the wind and current are moving your boat. Approach the dock with the boat pointed into the wind, if possible.
- If possible, throw a line to a person on the dock and have that person secure a bow line. If no one is on the dock, maneuver as close as you can, then secure any line to a piling or dock cleat.

Before tying up your boat, be sure to use enough fenders to protect the boat from damage. If possible, tie up the bow toward the waves with a good quality double-braided nylon line. Tie up only to the lifting rings, tie down eyes or cleats; DO NOT use the handrails or windshield frame. If the boat is to be moored for a long period of time, use chafing protectors on the lines to protect the gelcoat finish. Leave a little slack in the lines to allow for some wave movement or tidal action as applicable.

When departing, cast off the bow line and move away. If the wind or current is pushing away from the dock, cast off all lines and allow to drift until you are clear.

NOTES

NAUTIQUE

Section 6
Running

Nautique urges you and all others operating your boat to seek certified instruction from the local boating authorities.

This section is designed to present the most basic operational principles. It is NOT intended to cover all conditions encountered during operation. Therefore, the principles in this manual are limited to the facts related directly to the operation of your boat, while the responsibility for the proper application of these principles belongs to you.

MANEUVERING TECHNIQUES

Steering response depends on three factors: rudder position, motion and throttle.

Maneuvering in congested areas and advanced courses requires mastering and good “Rules of the Road” ethics. Your Nautique boat is designed to be responsive and agile enough to meet the challenge of these conditions.

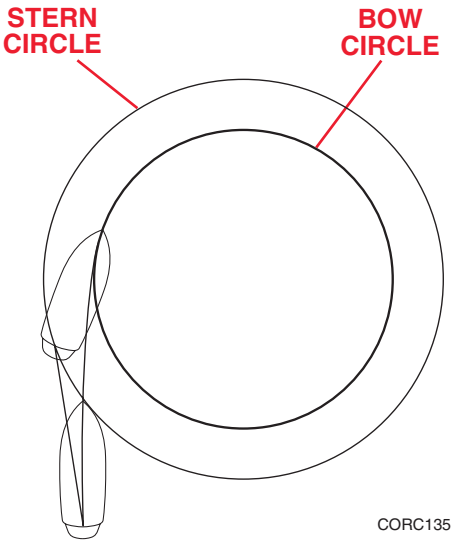

Maneuvering

Learning to maneuver a boat safely takes practice. A boat will respond differently at lower speeds than it will at higher speeds. Learn these maneuvering techniques in an open water area before attempting maneuvers near docks and other objects.

When making tight maneuvers, it is important to understand the effects of turning. Since both thrust and steering are at the stern of the boat, the stern will push away from the direction of the turn. The bow follows a smaller turning circle than the stern.

⚠ WARNING

Quick maneuvers can cause people and objects in the boat to be thrown about resulting in death or serious injury. DO NOT make quick or high-speed maneuvers when you or your passengers are not prepared.

The effects of unequal propeller thrust, wind and current must also be kept in mind. While wind and current may not always be present, experienced boaters will use them to their advantage. Unequal thrust is an aspect shared by all single-engine propeller-driven watercrafts. The Ski Nautique has a clockwise (right hand) rotation propeller. Propeller rotation has a direct effect on steering, especially when operating your boat in reverse. Operators should familiarize themselves with the handling characteristics of the boat in an open area before attempting to dock or perform other close maneuvers.

Stopping (checking headway) is a technique that must be developed. Reverse thrust is used to slow and stop the boat. The momentum of the boat will vary according to the load as well as the speed. Make it a practice to slow to idle (no-wake) speed before shifting into reverse.

When using speed control, such as Zero Off, it is good practice to avoid placing any objects over the GPS antenna. Restricting the GPS antenna's clear view to the sky could momentarily interrupt the GPS signal.

It is best to learn maneuvering skills in open water away from traffic. Adequate practice is the only way to develop your boating skills.

TOW PATTERN

A large loop pattern is preferred for beginners. This pattern does not require the skier to cross the wake. As the skier's skills improve, a looped end or dumb bell pattern may be used. The dumb bell pattern provides a long straight course which allows the wake to disperse, leaving the skier with a smooth water surface. The dumb bell pattern is popular with ski tournaments and clinics.

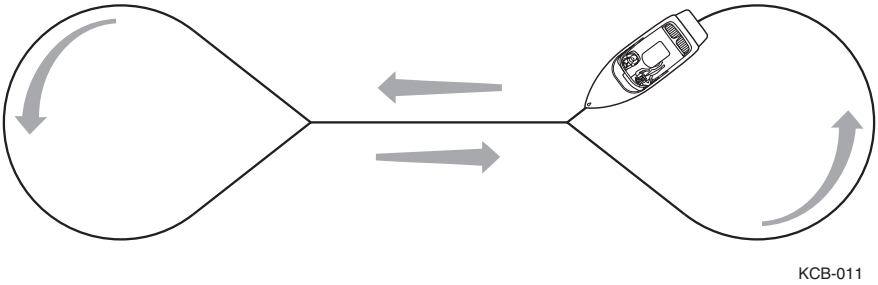

Dumb Bell Ski Pattern

FREEZING TEMPERATURES

When the boat is removed from the water, drain the cooling and heater system (as equipped) completely. Refer to ***Section 9, Winterizing Your Boat***.

ANCHORING

There are many types of anchors available on the market. The choice of one anchor over another depends on many factors. An anchor will usually hold best in a mixture of mud and clay or in hard sand. A Danforth anchor is recommended for general boating. For more information on anchors, contact your Nautique dealer.

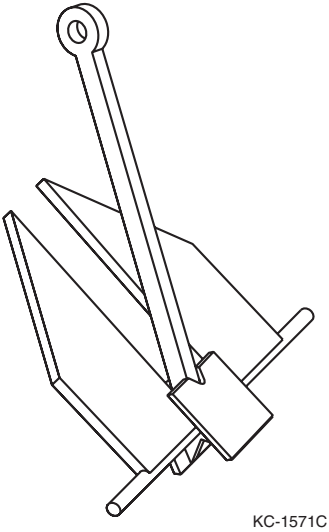

Danforth Anchor

⚠ WARNING

Improper use of an anchor can pull a boat underwater causing death or serious injury. Anchor from the bow, NOT from the stern.

DROPPING ANCHOR

- Make sure the line is tied to the anchor and tie the other end to the forward cleat or bow eye.
- Head the boat into the wind or current over the spot where you want to lower the anchor. Spot the boat before lowering the anchor.
- When the anchor hits bottom, slowly back up the boat, keeping tension on the line. Let out an anchor line that is six to seven times the depth of the water. For example, if you are in 10 feet (3 m) of water, let out 60 to 70 feet (18 to 21 meters) of line.

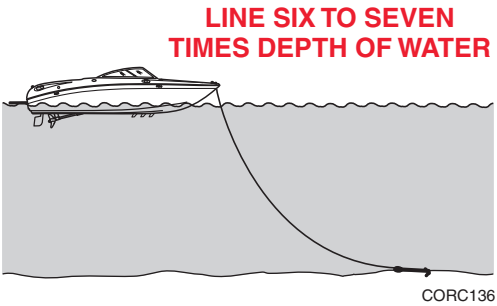

Anchoring

- Pull on the line to make sure the anchor is holding.
- Occasionally check your position against the shoreline. If the anchor is dragging and you are drifting, reset the anchor.

WEIGHING (PULLING IN) ANCHOR

Start the engine and move forward until the anchor line is straight up and down. Pull hard to lift the anchor from the bottom material.

If the anchor is caught on the bottom, attach a line to the bow cleat so that it is taut. The up and down motion of the bow from wave action may lift the anchor from the bottom. If the anchor remains caught, let out a few more feet of line and attach it to the bow cleat. Slowly maneuver the boat around the anchor until the anchor pulls loose. Be sure to keep the line tight during this procedure.

PERFORMANCE BOATING

⚠ WARNING

Failure to maintain control can result in death or serious injury. Always keep one hand on the steering wheel and the other on the throttle control lever. If the boat begins to operate in an unsafe way, adjust speed and course as necessary to regain control.

Your Nautique boat is a high performance boat. Nautique recommends you familiarize yourself with the unique handling characteristics of your new Nautique boat before attempting some of the more challenging maneuvers.

Nautique boats are the ones of choice of the better professional and amateur ski shows and tournaments. You may have seen drivers put their Nautique through extreme maneuvers. These drivers are paid professionals on a closed course with hundreds of hours of experience. DO NOT attempt extreme maneuvers without proper training.

We recommend that you never operate the boat without first having an initial orientation and familiarization/demonstration ride with your dealer or an operator experienced with the boat/engine combination. All boats perform differently.

The operator should have at least ten hours of experience with the boat before any full throttle operation. DO NOT operate your boat until you are completely experienced with its handling characteristics.

PROPELLERS

Your Nautique boat is equipped with a propeller best matched to its engine and boat combination. If you feel you are experiencing poor performance, contact your Nautique dealer. Care and selection of your propeller is very important to proper boat operation.

NAUTIQUE

Section 7
Care and Maintenance

This section describes how to care for and maintain your Nautique boat. Periodic inspection and maintenance of items listed in this section is absolutely necessary.

Winterization and some engine maintenance functions are best performed by your Nautique dealer. Some maintenance items that can be done by you or your dealer are listed below. We suggest that you familiarize yourself with these even if you have your dealer service your boat.

GENERAL MAINTENANCE

1. Read engine operator and maintenance manual very carefully.
2. Check for fuel line leaks every time you use the boat.
3. DO NOT start your engine if gasoline odor is present. Gasoline fumes are highly explosive. Before starting your engine, open the engine cover, inspect the engine compartment for gasoline fumes and operate the blower for at least four minutes. Run your blower when operating at slow speeds. If fuel vapors are present, do not start the engine. Check all hoses and fittings to determine the source of the vapor. Make the necessary adjustments or take the boat to your local dealer to eliminate the fuel vapor.

WARNING

Fumes accumulating in bilge area present a fire or explosion hazard which could cause death or severe injury. Ventilate the engine compartment by running the blower for four minutes, especially after repairing or refueling and check for fuel spills or leaks. If you smell gasoline vapor or see liquid gasoline, DO NOT start the engine. DO NOT store rags used to wipe up fuel or solvent spills in the boat. Dispose of rags properly ashore.

4. When servicing the ignition switch or any wiring, always disconnect the battery cables from the battery.

5. Check for water circulation when the engine is running. Exhaust should contain steady flow of water. In closed cooling systems, make sure the coolant in the cooling system is at the proper level.

ENGINE INTAKE RAW WATER STRAINER

Visually inspect the engine intake water strainer for debris before each use. To clean the strainer, close the engine intake water valve and unscrew the strainer bowl **(A)**. DO NOT lose the rubber O-ring **(B)** that seals the bowl to the cap. Carefully remove the screen **(C)**. Replace any worn parts.

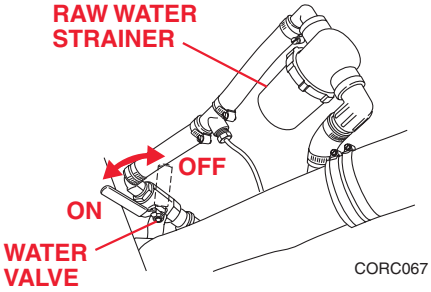

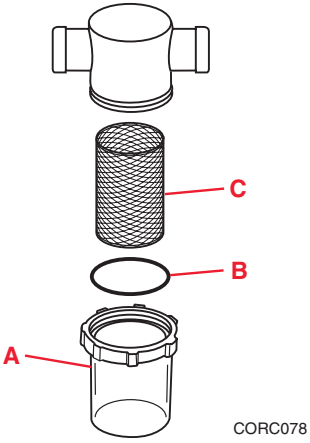

Clean debris from the bowl and screen and rinse parts in fresh water. Insert the screen, place the O-ring in the groove of the bowl and screw the bowl on hand tight. Be sure to open the water valve before starting the engine.

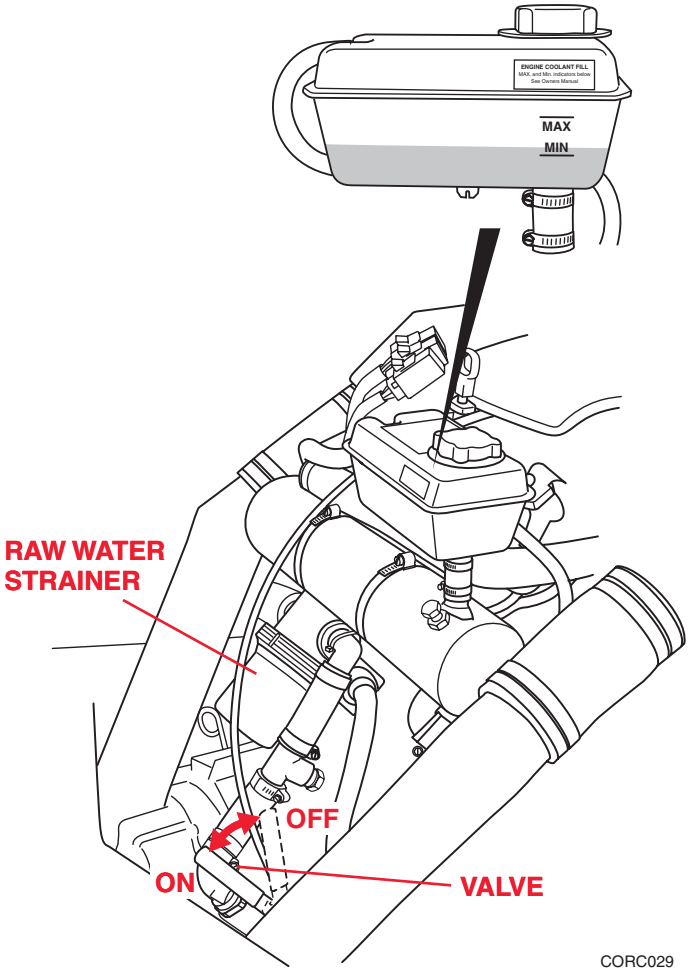

Some engines are equipped with a closed cooling system with a self-contained reservoir for engine coolant. Self-contained systems are equipped with a heat exchanger which uses raw water to cool the coolant. All raw water systems are equipped with a valve and strainer.

BILGE PUMPS

Check your bilge pumps often to make sure they are operating efficiently. There are two bilge pumps: one is at the rear of the boat near the rudder and under the floor by the forward bulkhead located next to the fuel tank. To keep the pumps from getting clogged, remove any debris you find in the bilge. Wash the bilge with a good biodegradable household detergent or a bilge cleaner available at your Nautique dealer or a marine supply store. Rinse with water with your bilge pumps running. If your pumps seem to lag, remove the top of the pump from the base and check the impeller to make sure there is no debris inside. See your dealer if there is still a problem with the pumps.

CE BILGE DISCHARGE FILTER

Your boat may be equipped with a CE-compliant bilge discharge filter system that is designed to prevent oil-contaminated bilge from being discharged into the environment. One CE bilge filter is required for each bilge pump. The CE bilge filter is located below the deck, connected to the bilge discharge hose just before the hose connection to the deck outlet fitting.

CE bilge discharge filter cartridge XOil™ replacement should be part of a regular maintenance program to prevent oily, contaminated bilge from passing through the deck outlet fitting into the environment. The period between cartridge replacements will depend on the condition of the bilge. Always replace the cartridge immediately after there has been a great amount of oil or other contaminants spilled into the bilge.

CARTRIDGE REPLACEMENT

1. Turn off power to the bilge pump.
2. Unscrew the filter bowl **(A)** by turning counterclockwise and pour any excess bilge water remaining in the bowl back into the bilge.
3. Remove the used cartridge **(B)** and dispose of in a suitable container.
4. Inspect the O-ring **(C)** located on top of the bowl and replace if worn.
5. Be sure that the seals located on the top and bottom of new cartridge are in place and correctly aligned.
6. Place the new cartridge into the bowl and reattach the bowl to the filter housing **(D)** by turning clockwise.
7. Turn on power to the bilge pump.
8. Turn on the bilge pump and inspect all connections for leaks.
9. Bleed any air trapped in the housing by using the bleed button **(F)** or, if so equipped, the bleed screw **(E)**. Both are located on top of the filter housing.

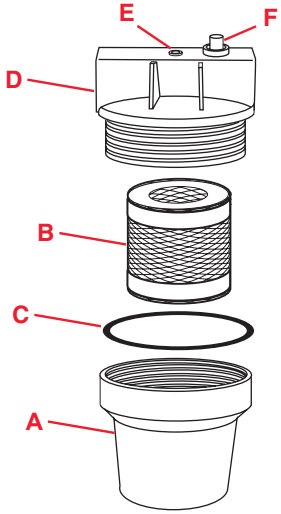

CORC0241

PROPELLER

⚠ CAUTION

- **A propeller can be very sharp. Be careful when you handle it. Wear a pair of protective gloves when handling any propeller.**
- **Remove the Emergency Stop Switch clip from the switch to prevent accidental starting of the engine.**
- **DO NOT reuse the nylon locknut or the cotter pin.**
- **DO NOT use a damaged propeller. A damaged propeller can damage your engine and boat.**

REMOVAL

1. Remove the cotter pin from the propeller shaft and discard.
2. Wedge a piece of 1" x 4" wood between the propeller blade and the starboard side of the strut and rudder.
3. Remove the nylon locknut and discard.

Use a propeller puller to remove the propeller, then remove the key from the keyway. Inspect the keyways and key for any damage.

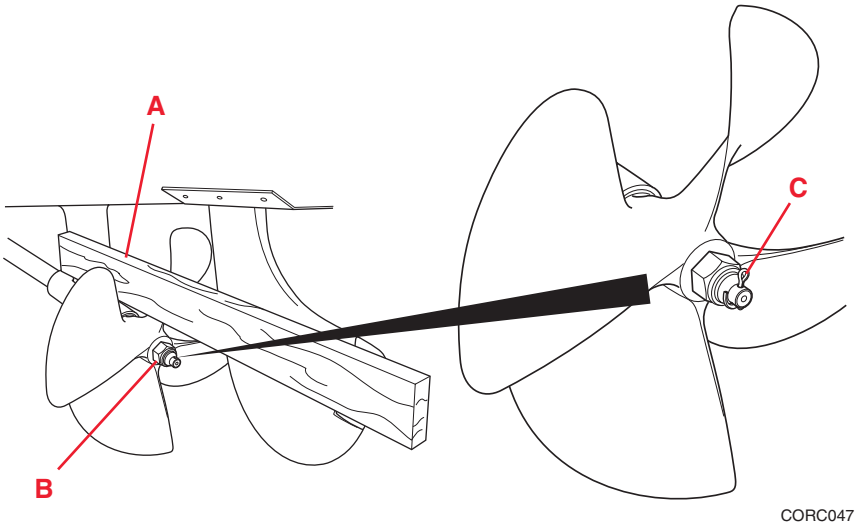

INSTALLATION

Before placing the propeller on the shaft, look at the keyway on the shaft and in the propeller. Make sure the key slides freely in the shaft keyway and the propeller keyway. DO NOT use the propeller nut to advance the prop onto shaft.

If the key has burrs, remove them by filing the flat sides or replace the key. DO NOT file the key beyond its normal shape or size.

1. Rotate the shaft until the keyway is “up.”
2. Place the key in the shaft keyway. The propeller will only slip on in one direction. (The propeller shaft has a tapered end. The bore in the propeller hub is tapered to match the shaft. The forward end of the propeller hub has the larger opening.) Rotate the propeller so the keyway in the propeller is aligned with the keyway on the shaft. Once it is aligned, push the propeller onto the shaft. You’ll hear a solid “thunk” or feel it, as the propeller is seated.
3. Wedge a piece of 1" x 4" wood **(A)** between the propeller blade and the port side of the strut and rudder.
4. Install a new nylon locknut **(B)** and torque the nut to maximum of 30 lb-ft (40.7 N·m).
5. Install new cotter pin **(C)**. Bend the retaining ends of the cotter pin in the opposite directions. Make sure the cotter pin is snug and does not rotate.

THROUGH-HULL FITTINGS

All fittings that actually pass through the hull on the wetted surface are caulked in. These are not serviceable and must not be tampered with.

QUICK OIL DRAIN SYSTEM

Change the engine oil after the first 25 hours of operation, then after every 50 hours. The boat must be removed from the water to use the quick oil drain system. There is a drain hose attached to the bottom of the oil pan with a small plug screwed into the loose end of the hose.

Remove the T-Handle drain plug from the bottom of the boat and put the end of the oil drain hose through the T-Handle opening. Make sure there are no kinks or sharp bends in the hose. The engine will drain most efficiently when the oil is warm. Allow several minutes for the oil to settle and drain. Dispose of used oil in an environmentally safe manner.

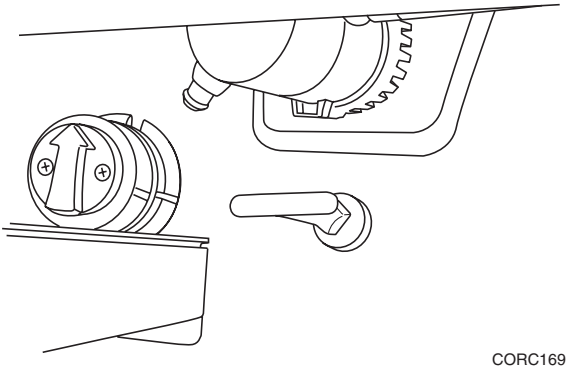

CORC169

NOTICE

Be sure the engine is off when you are draining your oil.

⚠ WARNING

Prolonged or repeated contact with used engine oil can cause death or serious injury. Wash affected area immediately with soap and water.

SALT WATER BOATING

NOTICE

If you use your boat in salt water or other unusual water conditions, flush your engine and cooling system with fresh water.

Nautiques are equipped with a Fresh Water Flushing Kit. We recommend you use this system after each time your boat has been used in salt water or unusual water conditions. Flushing the engine and cooling system by running the boat in fresh water is another good way to flush the engine, but it must be done immediately.

DO NOT connect the flushing kit to a water source which exceeds normal municipality water pressure.

PROPER USE OF FRESH WATER FLUSHING KIT

1. Open the ball valve located between the system's deck fitting and main engine cooling water supply hose.
2. Make sure that the ball valve located in the main cooling system supply hose is open. This valve is located near the hull inlet fitting.
3. Open the cap of the system deck fitting and properly connect a water supply hose, making sure the connection is secure.
4. Turn on the hose and start the engine.
5. Close the ball valve of step 2 unless the boat is on a trailer or lifted up in the air, in which case it should be left open.
6. Run the engine for several minutes after it has reached the normal operating temperature to ensure proper flushing.
7. Reduce the engine speed to idle, shut off the engine and immediately shut off the water supply hose. Please note: Failure to shut off the water supply hose immediately could possibly result in engine damage.
8. If the ball valve of step 5 was closed, open it now and close the step 1 ball valve.
9. Remove the water supply hose and reinstall the deck fitting cap securely.

BATTERY MAINTENANCE

⚠ WARNING

Explosion or fire hazard from vented fumes can cause death or serious injury.

- **Wear eye protection and rubber gloves when working on or around batteries.**
- **DO NOT charge or use a battery booster to start your engine.**
- **DO NOT smoke or bring a flame near a battery at any time.**
- **DO NOT have your head directly above a battery when making or breaking electrical connections.**
- **DO NOT use a metal object to spark between battery posts to check if the battery is charged.**

Take care when connecting or disconnecting a battery charger. Be sure the charger is turned OFF and unplugged from power source when you clip ON/OFF the connecting clamps.

Make sure you have a solid connection with the charging clamps. Poor connections are common causes of electrical arcs and engine problems. Follow instructions.

DO NOT make or break electrical circuits at the battery terminals; a spark will occur when a live circuit is opened or made. Turn off all components.

Use a voltmeter or hydrometer to check the battery charge condition.

The battery cables should be removed from the battery when the boat is placed in storage, on display or in transit. This will eliminate the possibility of the engine accidentally starting without a supply of cooling water and may damage the engine.

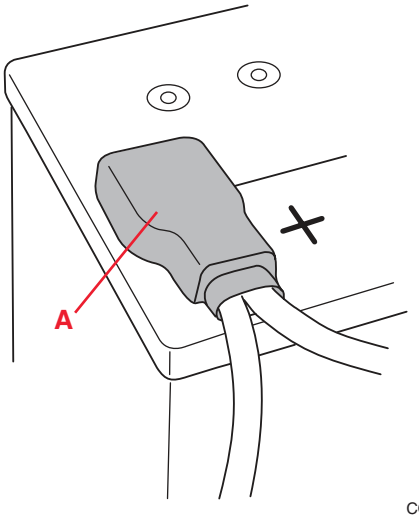

CORC212

+ = red positive (A)

- = black negative (not shown)

MAINTENANCE-FREE BATTERIES

To clean your battery, remove and wash down the battery case with a diluted ammonia or baking soda/water solution to neutralize the acid, then flush with fresh water.

REFILLABLE BATTERIES

To clean a refillable battery, follow the above instructions and add the following procedures.

Keep the fill/vent caps tight so the neutralizing solution does not get into the battery cells.

The electrolyte level should be checked every 30 days. Add only distilled water to maintain the level between the top of the plates and the bottom of the fill/vent cap.

NOTICE
DO NOT overfill. Remember, batteries contain sulfuric acid which can cause severe burns.

BATTERY CABLE WARNING ALARM

⚠ CAUTION

Avoid equipment damage caused by reversed polarity. Alarm sounds if battery leads are reversed.

Nautique has included a Warning Alarm in the battery cable system that sounds an audible alarm if the positive or negative battery cables touch the opposite connecting post on the battery (reverse polarity situation). The alarm will sound even if the battery selector switch is in the OFF position. If this situation occurs and the alarm is activated, inspect all electrical systems for possible damage before attempting to reconnect the battery cables.

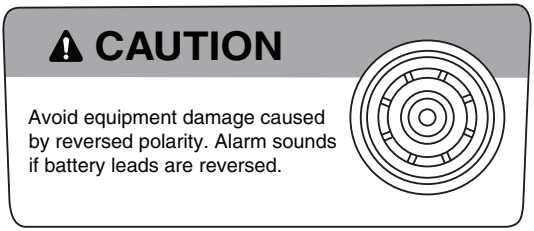

CORC0753

NOTE: *When connecting the battery terminals to the battery, always connect the RED terminal to the positive (+) battery post first. Then connect the black terminal to the negative (-) battery post.*

Also, if connecting additional wire lugs to the battery, never stack more than 4 lugs onto a battery and always connect the largest lug on the bottom and the smallest on the top.

GELCOAT MAINTENANCE

Your Skipper's Kit includes literature that identifies quality boat care products recommended by Nautique. Nautique is proud of its heritage and wants you to feel this pride every time you use your boat.

Regular maintenance is the key to keeping your hull and deck surfaces in good condition. Sun exposure, residue from trees and minerals in the water affect your boat's finish.

To help maintain the shine of your boat, wash the hull with a mild bio-degradable detergent after each use. This will help to remove any debris and waterborne materials that are on the hull. Use a soft sponge or towel and dry with a chamois cloth to prevent water spots.

Wax the hull sides and deck regularly with a high quality wax. Waxes and polishes are available at your Nautique dealer and marine supply stores. Always follow the directions on these products carefully before you use them.

The hull bottom is an especially important area to keep clean since any buildup of water scum and algae will create drag and reduce the boat's efficiency. If you must leave your boat in the water, there are compounds to remove algae buildup on your hull. Some of these can be caustic. Pay special attention to the cautions on the label of these coatings. Ask your Nautique dealer for advice on which work best in your area.

If your boat's gelcoat develops a chalky look over a period of time due to exposure to sun, there are gelcoat buffing and polishing compounds available at your Nautique dealer and marine supply stores. DO NOT use common household scouring pads or powders.

Sudden changes in temperature can affect gelcoat. If you move your boat from outdoors to a heated area, allow the temperature change to be gradual. Heat the area after the boat is moved to allow the boat to warm up slowly as the area is heated. Also, if you move your boat from a warmer area to a colder one, wait for the outside temperature to be closer to the warmer area's temperature or allow the area and the boat to cool down first.

CARE OF METAL

- Aluminum care
- Stainless care
- Chrome

Keep all metal work rinsed and wiped dry. Periodically polish it with a quality commercially available metal polish to remove substances such as air-borne pollution and natural body oils from your hands.

DO NOT use citrus cleaners on stainless steel or wax on anodized towers.

CARE OF GLASS

Glass components such as windshields and mirrors can be cleaned by spraying a mild glass cleaner product either directly onto the glass or onto a microfiber cloth, then wiping the surface in a circular motion.

The face of your LINC Screen can be cleaned using the same products, but DO NOT spray any cleaner directly onto the LINC screen. Spray the cleaner onto the microfiber cloth and then wipe the LINC screen.

ADHESIVE-BACKED NON-SKID SURFACES

All adhesive-backed non-skid surfaces can be cleaned by using a medium-to-stiff brush and warm, soapy water. Make brushing strokes in the direction of the non-skid grain. Rinse with clean water and let the non-skid air-dry.

UPHOLSTERY CLEANING INSTRUCTIONS

BASIC CLEANING

We recommend cleaning at least once a week to extend the lifespan of the upholstery, preventing dirt and contamination from building up and stains from becoming permanent.

Clean the whole surface in circular motions using a mixture of 1 part liquid hand soap and 9 parts water. Rinse and wipe with a clean damp white cloth to get rid of any excess soap. Repeat as needed and then let dry. See the list below for a guide to recommended cleaning products.

Once a month, you can use a soft-bristle brush for a deeper cleaning.

Do's

Damp white cloth

Soft bristle brush

Always rinse with water and pat dry

Use only approved cleaners:

- Mild Non-Bleach soap and water (diluted 1:30)
- Bling Sauce Mild Soap Sauce®
- Babes Seat Soap®
- Formula 409® (diluted 1:1)
- Fantastik® (diluted 1:1)
- Star Brite Vinyl Cleaner®

Don'ts

NO eraser sponges

NO power washers

NO abrasive cleaners

NO silicones

NO full-strength bleach

NO hard brushes

NO conditioners or protectants

⚠ CAUTION

Some solvents are highly flammable. Exercise proper care in cleaning and notify personnel in area of danger. Wear rubber gloves during all cleaning activities. Use caution in cleaning around buttons, stitching and wooden or decorative trim, since these solvents could damage such areas.

EXTREME CIRCUMSTANCE CLEANING

If you need to disinfect the product because it has come in contact with organic material (blood, urine), the following procedure can be performed:

1. Wipe area with a clean dry white cloth.
2. Mix 1 part of a bleach solution that has a 0.5% concentration to 10 parts water.
3. Rinse and wipe with a clean damp white cloth.
4. Wipe dry with a clean dry white cloth.

TUNABLE RUDDER

The Tunable Rudder* is designed to offer easy steering adjustment. This system uses a composite tuning foil which is located at the upper aft corner of the rudder blade. Use a Phillips head screwdriver to adjust the foil. Loosen the two screws in the relief slots of the tuning foil.

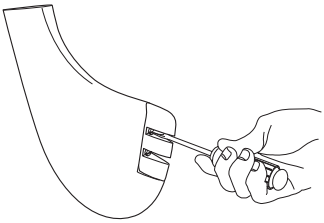

CORC045

If the boat is pulling port **(A)**, rotate the foil to port **(B)** and tighten screws. If the boat is pulling starboard **(C)**, rotate the foil to starboard **(D)** and tighten screws. Always remember that movement of the trailing edge of the foil to one side will cause the steering to pull to the opposite side.

NOTICE
After each adjustment, test run and adjust again if necessary.

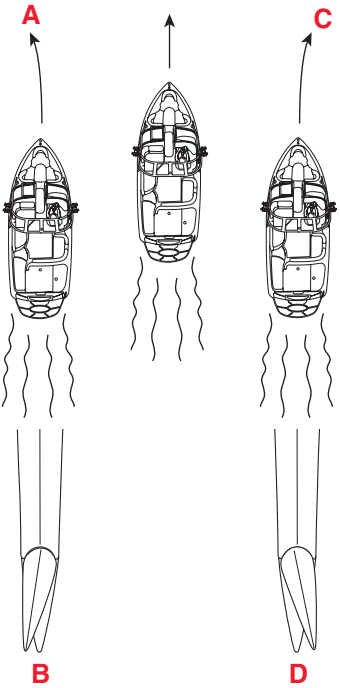

CORC162

*Manufactured under license from National Products, Inc. U.S. patent 5,746,147.

RUDDER REMOTE LUBE FITTING

The remote lube fitting allows for easy access to lubricating the rudder. The remote lube fitting is located on the starboard stringer under the engine cover near the back. Use a quality marine grease and gun. Connect the grease gun to the fitting and apply a light pressure to the gun until you feel a slight resistance.

CHECKING TRANSMISSION FLUID

1. The fluid level must be checked in one of the following conditions:
   A. Engine/Transmission is cold;
   B. Engine/Transmission has been shut off for at least 2 minutes to allow fluid to drain back.
2. Remove the dipstick by turning the T-handle counterclockwise. Wipe the dipstick off using a clean cloth.
3. Re-insert the dipstick to the threads (***DO NOT screw the dipstick in***) and remove. Observe the fluid level.
4. The fluid level should be at the “FULL” mark. If low, add the specified fluid in small increments through the dipstick hole in the transmission. Repeat the checking procedures until the fluid level is at the “FULL” mark.
5. Replace the dipstick and tighten securely.

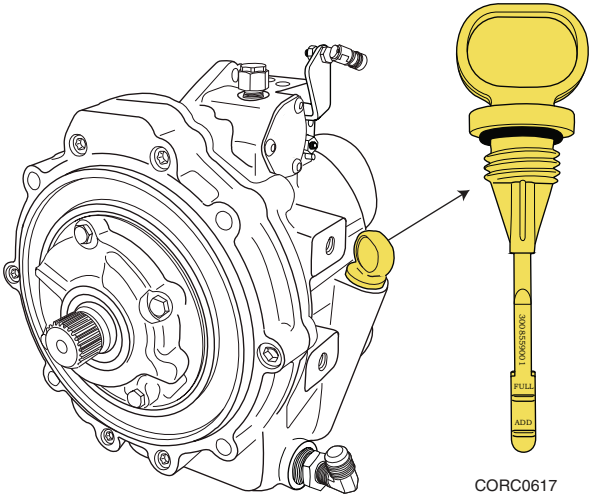

CORC0617

NOTES

NAUTIQUE

Section 8
Troubleshooting

The following chart will assist you in finding and correcting minor problems with your Nautique boat. Refer to your engine operation and maintenance manual for more detailed information for any problem concerning the starting, shifting or operation of the engine.

Some problems may require the skills of a trained technician and special service tools. Please contact your Nautique dealer for assistance.

TROUBLE CHECK CHART

PERFORMANCE

Symptom	Possible Cause
Starter motor will not operate	• Shift handle not in NEUTRAL
	• Battery disconnect switch OFF
	• Battery and electrical connection loose or corroded
Engine will not start	• Emergency stop switch not in place
	• Starting procedure not followed
	• Fuel tank empty
Poor boat performance	• Contaminated fuel
	• Clogged fuel filter
	• Uneven load distribution
	• Improper propeller selection
	• Marine growth on hull
	• Engine problem
Poor gas mileage	• Marine growth on hull
	• Engine problem
Excessive vibration	• Damaged or fouled propeller
	• Misaligned propeller shaft coupling
	• Bent propeller shaft
	• Engine problem
Engine runs but boat makes little or no progress	• Fouled or damaged propeller
	• Engine problem
Steering problem	• Corroded steering cable
	• Rudder worn
Throttle problems	• Throttle wire harness loose or unplugged. Check the wiring harness connection at throttle and engine.
	• Defective throttle return spring

Symptom	Possible Cause
Shifting problems	• Low transmission fluid level
	• Sticking transmission shift lever
	• Bad wire connection in shifting harness
Electrical problem	• Open circuit breaker or blown fuse
	• Loose wiring connection
	• Defective switch or gauge
Dim or no lights	• Open circuit breaker tripped or in OFF position
	• Battery discharged

NOTES

NAUTIQUE

Section 9
Storage

LIFTING RINGS

⚠ WARNING

Always lift your boat by connecting properly rated cables or straps with appropriately sized hardware to the factory installed lifting rings at the bow and stern of the boat.

Refer to ***Specifications on page 2-1*** of this manual to identify the correct weight and lift ring spacing for your boat. Nautique recommends you never configure the lifting cables or straps at more than a 10 degree angle from 90 degrees vertical.

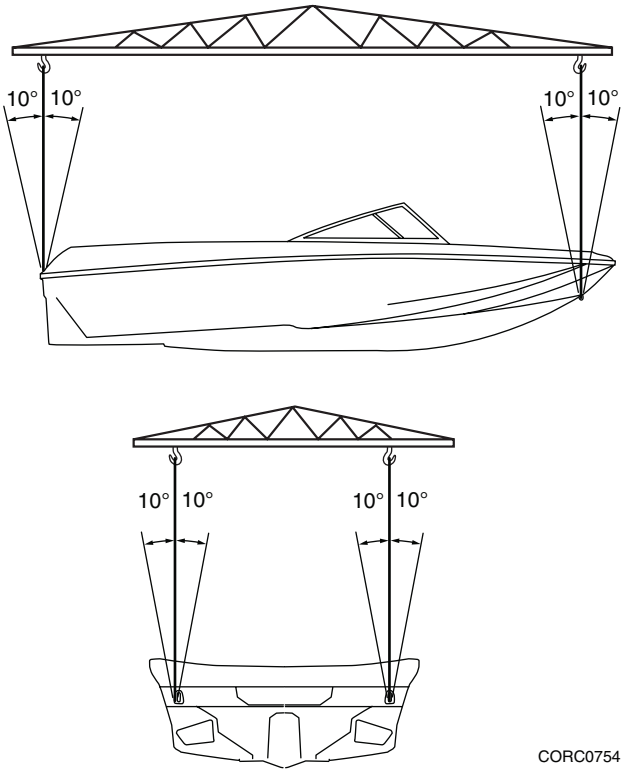

⚠ CAUTION

Drain the bilge and/or a launch control system and/or aftermarket water bladder(s) to eliminate excess water before you lift the boat.

NOTICE

Only use a hook that will pass easily through the lifting ring without binding. A hook that is too large or off-center could break the lifting ring. DO NOT use a sling to lift the boat. Damage to your boat can occur.

If your boat is equipped with a retractable lifting ring, it can be used for lifting your boat.

WINTERIZING YOUR BOAT

Winter storage procedures vary depending on climate, type of storage and length of storage. Check with your dealer/storage facility manager for their advice on what works best in your climate. Winterization functions are best performed by your Nautique dealer. Refer to your engine operation and maintenance manual for more information.

When storing your boat up on a rack system, it is important that the racks adequately support the hull bottom.

If you do not have a trailer, support the boat like a Nautique dealer recommended trailer. It is important to have an even weight distribution.

If you use a mooring cover, DO NOT put it on when the interior of the boat is wet and/or hot. It will trap moisture and lead to mildew on the carpet and/or vinyl. Make sure your mooring cover allows air to circulate, even if you have to leave a portion of the cover off.

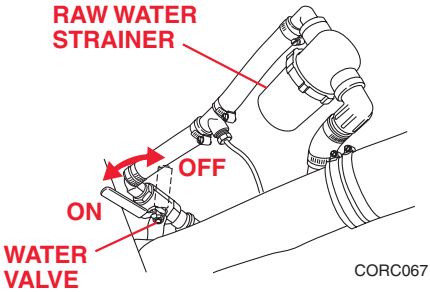

The raw water strainer bowl **(A)** remains full of water even after the rest of the engine cooling water system is drained. To properly winterize your boat, the strainer must be removed and emptied. **DO NOT lose the rubber O-ring (B) that seals the bowl to the cap.** Clean screen **(C)** if required. If the water is not removed, the bowl can be damaged. A damaged sea strainer can cause overheating problems during the next season.

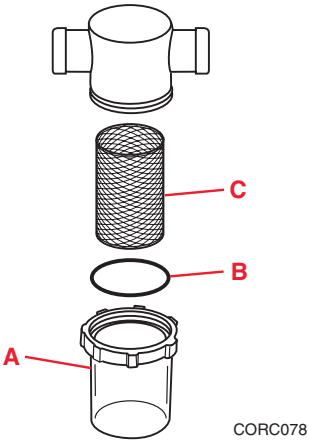

WINTERIZING THE HEATER SYSTEM (IN RAW WATER COOLED ENGINES ONLY)

1. Disconnect the hose connections at the engine (2 each).
2. Place one hose end into a small bucket and introduce 50 PSI (or less) of air into the other hose end. This will force all fluid out of the hoses and the heater core.
3. Reconnect the hoses to the engine.

CHECK FOR WATER IN YOUR FUEL SYSTEM

A small amount of water left in the fuel system for several months can result in damage to the fuel system and engine. If you are storing your boat for the winter, it is a good practice to remove any water in the fuel system.

The Fuel Control Cell can be drained by removing the drain plug at the bottom of the canister.

1. Loosen the return fuel hose to provide an incoming air source.
2. Clamp the return fuel line some way to minimize the amount of fuel that may drain.
3. Once the canister is drained, coat the threads of the drain plug with a fuel resistant pipe thread sealer, then replace and tighten the plug.
4. Reconnect the fuel hose, and tighten the hose clamp. The threads must be sealed properly to avoid a possible fuel leak.

Check your Fuel Control Cell once each year for signs of water in the canister. If it appears there is water buildup in the canister, see your Nautique dealer for service.

An empty fuel tank can accumulate water inside by changing temperature and repeated cycles of condensation on the inner surfaces of the tank. If the fuel tank is kept at about 3/4 full during storage, less water can condense, limiting the buildup of water in the fuel tank.

Fill the tank to 3/4 full maximum during storage to eliminate the possibility of fuel expansion problems caused by temperature changes. This minimizes overflow of fuel from the fuel vent. Not only can this overflow be hazardous, but it will also adversely affect decals and graphics on the boat.

Add a good quality fuel stabilizer to the fuel prior to winterizing to slow down the rate of fuel decomposition. You can purchase a fuel stabilizer at your servicing dealer, most marinas or an auto supply store. Add the stabilizer to the tank.

If you did not add the stabilizer previously, run the engine to circulate fuel throughout the system. Remember, always follow the fuel stabilizer manufacturer's recommendations for proper mixing.

NOTICE

Gasoline expands when the temperature increases. Never store your boat with more than 3/4 of a tank.

Refer to the engine's owner's manual for winterization of the engine.

WINTERIZING BALLAST TANKS (IF EQUIPPED)

NOTICE

It is extremely important to protect the Ballast System during freezing temperatures and during long periods of non-use. When following this procedure, remember to protect our natural resources by using environmentally friendly products; and to always discard in an environmentally friendly manner.

1. Make sure your boat is out of the water, the tanks are completely drained and the tank water intake/drain valves are open.
2. Use a 50/50 mixture of an environmentally friendly antifreeze and fresh water.
3. Pour an even amount, approximately 1 gallon (3.8 liters) of the antifreeze mixture into each tank's vent.
4. Place a container under the intake/drain of the tank you are winterizing to catch any spilled mixture.
5. Operate the pump in the drain mode for two seconds and shut off. Repeat procedure for other tank(s).
6. Close the tank's water intake/drain valves.

When returning your boat back to service, drain the remainder of the mixture before getting onto the water.

TRAILER/TRAILERING

HITCH

If you do not already have a trailer hitch installed on your vehicle, go to a reputable installer to have the proper size hitch installed. Always use a hitch rated with the appropriate capacity to match the trailer and boat's gross weight.

⚠ WARNING

Loss of control can cause death or serious injury. DO NOT attempt to tow more than one trailer at a time behind your vehicle. Attempting to tow an additional trailer will adversely affect the trailer tongue weight.

⚠ CAUTION

DO NOT use a bumper mounted hitch on your vehicle. Use a hitch that is attached to the frame of your vehicle only. DO NOT compromise your equipment, your safety or the safety of others.

WIRING

The trailer requires wiring from your vehicle to the trailer lights. This can usually be done by the hitch company.

SECURITY

There are several locking devices available at marine supply stores to aid in securing your boat whether or not it is attached to your vehicle.

TOWING YOUR BOAT

Read this checklist prior to trailering your boat.

- Check wheel lug nuts for tightness.
- Be sure the trailer tongue is securely on the hitch and the safety chains from the trailer are secured to the vehicle.
- Be sure a cable or strap secures the bow eye of the boat to the trailer. Make sure this is tightly secured.
- Be sure the trailer electrical connector is plugged in. Allow sufficient slack for cornering. Check brake lights, turn signals, emergency flasher and running lights.
- Be sure your gear inside the boat and seat cushions cannot shift or fly out of the boat during trailering.
- Be sure the walk-thru door of the windshield is closed and latched while the boat is being trailered.
- If you are using any sort of water “ballast” system to add weight to the boat, be sure it is drained before you put the boat on the trailer. These systems can adversely affect the tongue weight of the trailer. Your boat is not designed to carry exceptionally heavy loads. This can adversely affect the proper balance of the boat/trailer combination and cause tire failure and/or loss of control.
- If your boat is equipped with a trailer bow winch, make sure the boat is properly located on the trailer and the winch strap/cable is tight.
- Make sure the platform bracket pins are in place before trailering.
- Remove bilge drain plug(s).

LONG TRIPS

DO NOT use your boat and trailer to haul excessive gear.

Each time you stop on a long trip, check the following:

- Make sure the wheel lug nuts are tight and the bearings are lubricated.
- Make sure the boat is still positioned snugly against the bow stops.
- Examine the hitch connection to be sure it is firmly attached and the safety pin and chains are securely fastened.
- Make sure all trailer lights are still functioning properly.
- Re-examine the contents of your boat to ensure that no items such as life jackets or other gear have shifted and will not fly out while you are on the road.

NOTES

NAUTIQUE

Glossary

ABYC – American Boat and Yacht Council, Inc.

AFLOAT – On the water.

AFT – Toward the rear or stern of the boat.

AGROUND – Touching bottom.

AMIDSHIP – Center or middle of the boat.

ANCHOR – (1) An iron casting shaped to grip the lake bottom to hold the boat. (2) The act of setting the anchor.

ANODE – An electrode carrying a positive charge.

ASHORE – On the shore.

ASTERN – Toward the stern.

BAIL – To remove water from the bottom of the boat with a pump, bucket, sponge, etc.

BALLAST – Any solid or liquid weight placed in a boat to increase the draft, to change the trim.

BEAM – The widest point on the boat.

BEARING – Relative position or direction of an object from the boat.

BILGE – The lowest interior section of the boat hull.

BOARDING – To enter the boat.

BOUNDARY WATERS – A body of water between two areas of jurisdiction; i.e., a river between two states.

BOW – The forward end of the boat.

BULKHEAD – Vertical partition (wall) in a boat.

BUNKS – Hull supports on trailer that may be covered with carpet, plastic or rollers.

BURDENED BOAT – Term for the boat that must “give-way” to boats with the right-of-way.

CAPACITY PLATE – A plate that provides maximum weight capacity and engine horsepower rating information. It is located in full view of the helm.

CAPSIZE – To turn over.

CAST-OFF – To unfasten mooring lines in preparation for departure.

CATHODE – An electrode carrying a negative charge.

CAVITATION – A phenomenon in which low pressure within a liquid allows vapor bubbles to form.

CENTER LINE – A lengthwise imaginary line which runs fore and aft with the boat's keel.

CHINE – The point on a boat where the side intersects (meets) the bottom.

CLEAT – A deck fitting with ears to which lines are fastened.

CONSOLE – Also called helm. The steering wheel area of the boat.

CRANKING BATTERY – The main battery used for engine starting and electrical circuits.

CURRENT – Water moving in a horizontal direction.

DEADRISE – Transverse angle of the bottom of the hull.

DECK – The open surface on the boat where the passengers walk.

DRAFT – The depth of the boat below the water line, measured vertically to the lowest part of the hull.

ELECTROLYSIS – The break-up of metals due to the effects of galvanic corrosion.

FENDER – Devices built into or hung over the sides of a boat to prevent the boat from rubbing or chafing against other boats or piers.

FORE – Toward the front or bow of the boat. Opposite of aft.

FREEBOARD –The distance from the waterline to the upper surface of the side of the deck.

FUEL SENDING UNIT – The electrical device that is mounted on the outside of a built-in fuel tank and controls the dashboard fuel gauge.

GIVE-WAY BOAT – (1) Term for the boat that must take whatever action necessary to keep well clear of the boat with the right-of-way in meeting or crossing situations. (2) The burdened boat.

GUNWALE – The rail or upper edge of a boat's side.

HEAD – A marine toilet.

HELM – The steering wheel or command area.

HULL – The structural body of a boat below the deck.

HYPOTHERMIA – A physical condition where the body loses heat faster than it can produce it.

IN-LINE FUSE – A type of protective fuse located in the power wire of a direct current (DC) circuit usually near the battery.

KEEL – The lowest portion of the boat; extends fore and aft along the boat's bottom.

LINE – All rope in a boat or on the dock is referred to as "line."

LIST – Leaning or tilt of a boat toward the side.

MAKING WAY – Making progress through the water.

MARINE CHART – Seagoing maps showing depths, buoys, navigation aids, etc.

MID SHIP (AMIDSHIP) – In the vicinity of the mid-length of a boat, technically the exact half way between the bow and the stern.

MOORING – An anchor, chain, or similar device that holds a boat in one location.

NAVIGATION AID – Recognizable objects on land or sea such as buoys, towers or lights which are used to fix position to identify safe and unsafe waters.

NMMA – National Marine Manufacturer's Association

NO-WAKE SPEED – The speed at which a boat travels to produce an imperceptible wake.

PFD – Personal flotation device.

PLANING HULL – A hull designed to lift, thereby reducing friction and increasing efficiency.

PORPOISE – A condition in which the bow bounces up and down caused by trimming the engine too far out.

PORT – (1) The left side of a boat when facing the bow. (2) A destination or harbor.

PRIVILEGED BOAT – Term used for the boat with the right-of-way.

PROPELLER PITCH – Theoretical linear distance the propeller would move ahead during one complete revolution of it were turning with zero slippage.

RIGHT-OF-WAY – Term for the boat that has priority in meeting or crossing situations. The stand on or privileged boat.

RUB RAIL – The rubber extrusion that is fastened over the hull and deck joint.

RUDDER – A vertical metal device used to steer the boat

RULES OF THE ROAD – Regulations for preventing collisions on the water.

SACRIFICIAL ANODE – Metal parts fitted to the hull of boat to provide a transfer of ions to the cathodic part of an electrolytic coupling and so protect other parts of the boat that would otherwise waste away through electrolysis.

SLIP – The linear distance between the pitch (or advance) and the actual distance the propeller moves straight ahead through the water.

SPRING LINE – A mooring rope oriented at a small angle to the boats centerline, usually attached to the boat mid ship.

STAND ON BOAT – Term for the boat that must maintain course and speed in meeting or crossing situations. The privileged boat.

STARBOARD – The right side of the boat when looking towards the bow.

STERN – The aft end of a boat.

STOW –To put away. To store cargo in a storage locker.

STRINGER – Members under the floor that stiffen the hull bottom.

SURGE BRAKES – A type of trailer braking system designed to automatically actuate when the tow vehicle's brakes are applied.

TRANSDUCER – The unit that sends/receives signals for the depth sounder.

TRANSOM – The transverse beam across the stern.

TRIM – Fore to aft and side to side balance of the boat when loaded.

UNDERWAY – Boat in motion; i.e., not moored or anchored.

USCG – United States Coast Guard

VISUAL DISTRESS SIGNAL – A device used to signal the need for assistance such as flags, lights and flares.

WAKE – The waves that a boat leaves behind when moving through the water.

WATERLINE – The line of the water's edge when the boat is afloat.

WATERWAY – A navigable body of water.

WETTED SURFACE – The area of the immersed hull plus underwater gear.

NAUTIQUE

Warranty

NAUTIQUE LIMITED WARRANTY

Nautique boats, as originally manufactured by Nautique Boat Company, Inc. For purposes of this warranty, the terms "Nautique Boat Company" and its trademark "Nautique" are used interchangeably to refer to Nautique Boat Company, Inc., exclusive manufacturer of Nautique brand boats.

The Nautique warranty is backed by a tradition of boat building experience since 1925.

THERE ARE NO WARRANTIES WHICH EXTEND BEYOND THE DESCRIPTION OF THE FACE HEREOF. THIS LIMITED WARRANTY IS EXPRESSLY MADE IN LIEU OF ALL OTHER EXPRESSED WARRANTIES. DURATION OF ANY IMPLIED WARRANTY OF MERCHANTABILITY OR FITNESS FOR A PARTICULAR PURPOSE OR OTHERWISE, SHALL BE LIMITED TO AND COINCIDENT TO THE DURATION OF THESE EXPRESSED WARRANTIES. UNDER NO CIRCUMSTANCES SHALL NAUTIQUE BE LIABLE TO THE PURCHASER OR ANY THIRD PARTY FOR LOSS OF PROFITS OR OTHER DIRECT OR INDIRECT COSTS, LOSSES OR INCIDENTIAL OR CONSEQUENTIAL DAMAGES ARISING OUT OF OR AS A RESULT OF DEFECTS IN PRODUCTS HEREIN ABOVE WARRANTED.

Some states do not allow limitations on how long an implied warranty lasts, so the above limitation may not apply to you. Some states do not allow the exclusion or limitation of incidental or consequential damages, so the above limitation may not apply to you. This warranty gives you specific legal rights, and you also have other rights which may vary from state to state. To the extent that your state does not allow any exclusion or limitation expressed herein, such exclusion or limitation will not apply to you. All other allowable limitations or exclusions shall apply to you.

LIFETIME LIMITED STRUCTURAL WARRANTY:

Nautique warrants to the original user or purchaser, whoever comes first, of each new Nautique boat, that the deck, hull, and stringer system, as originally manufactured by Nautique, shall, under normal authorized use, remain free from structural defects in materials and workmanship. This limited warranty will be voided by the addition of unauthorized accessories that change the center of gravity, structural integrity, or any portion of the boat.

A structural defect is an inherent weakness, deformation, or material failure in the primary structure of the boat that compromises its ability to withstand operational and environmental loads in accordance with the boat's specifications and user manual.

FIVE (5) YEAR LIMITED BOAT WARRANTY:

Nautique warrants to the original user or purchaser, whoever comes first, that each new Nautique boat, as originally manufactured by Nautique, shall, under normal authorized use, be free of defects in materials and workmanship for a period of five (5) years or one thousand (1000) hours (whichever occurs first) after the first date of delivery of the boat to the original user or purchaser. This coverage applies to factory-installed components including boat parts, options, or other components not manufactured by Nautique. Notwithstanding the foregoing, should a boat remain in a dealer's inventory for longer than a period of two years, this warranty coverage will automatically commence two years from the date a boat is delivered to the dealer by Nautique.

GEL COAT THREE (3) YEAR LIMITED WARRANTY:

Nautique warrants to the original user or purchaser, whoever comes first, of each new Nautique boat that the gel coat, under normal authorized use, shall remain free from defects in materials and workmanship (including: cracks not caused by negligence, impact, or collision) for a period of three (3) years or three hundred (300) hours (whichever occurs first), after the first date of delivery to the original user or purchaser. See owner's manual for owner's gel coat maintenance responsibilities. Notwithstanding the foregoing, should a boat remain in a dealer's inventory for longer than a period of two years, this warranty coverage will automatically commence two years from the date a boat is delivered to the dealer by Nautique.

TRANSFERABLE LIMITED STRUCTURAL, BOAT, GEL COAT LIMITED WARRANTIES:

The remaining portion of the Limited Boat, Gel Coat, and Structural Limited Warranties may be transferred, for a fee, to the second (2nd) purchaser only as follows: (1) within a period of five (5) years or one thousand (1000) hours (whichever occurs first) for the Limited Boat Warranties; (2) within three (3) years or three hundred (300) hours (whichever occurs first) for the Gel Coat Limited Warranty; and (3) within a period of five (5) years or five hundred (500) hours (whichever comes first) for the 10 Year Limited Structural Warranty, in each case after the first date of delivery of the boat to the original user or purchaser. All such transfers must be completed within thirty (30) days after the second purchaser's acquisition of the boat pursuant to terms and conditions established by Nautique from time to time, including those listed in Nautique's Request for Transfer of Warranty application (which is included in this owner's manual, or available by contacting an authorized Nautique dealer).

ENGINE/POWER TRAIN WARRANTY:

The engine is covered by a separate warranty of the engine manufacturer. For details, terms, and conditions of this warranty, see the engine manufacturer's warranty policy.

EXCEPTIONS:

The Lifetime Limited Structural and Gel Coat Limited Warranties do not cover the gel coat cracks (that are not considered structural defects, as defined above), discoloration, blisters, or bubbles.

EXCEPTIONS:

The Nautique Limited Warranties described above shall not apply to:

- Normal maintenance of boat, or any component thereof, including but not limited to, vinyl care, alignment, adjustments, connectors, rusting, corrosion in general, and wear items including, but not limited to, non-skid material, battery, bushings, packing material, bulbs, seals, gaskets, impellers, carpet backing, wearable tower accessories/parts.
- Gelcoat finish or colorfastness of gelcoat finish, blisters, chrome plated, anodized or aluminum finish or colorfastness or fading of finish, on carpet or vinyl.

- Damage to any boat, component or part as a result of being altered structurally, modified, including the installation of above or below deck hardware.
- Paint below the waterline when stored in water, the failure to rinse the boat in fresh clear water promptly after in brackish water or saltwater, or the application of antifouling paint.
- Damage resulting from environmental conditions, such as, but not limited to, saltwater, mold, mildew, hail, road salt, freezing conditions, sun exposure, or thermal cracking.
- Damage as a result of high-pressure “power washing.” Power washers should never be used on any portion of the boat; any use of a power washer will void the warranty.
- Damage or malfunction of a boat, or any component thereof, resulting from owner abuse, lack of maintenance, improper maintenance, impact, misuse (“misuse” including, without limitation, any use of the boat in any manner inconsistent with, or otherwise in contravention of, the recommendations, requirements, and other provisions set forth in the user manual for the boat), negligence, collision, delay of repair (unless specifically and directly authorized by the Nautique warranty department in writing), trailer or trailer design, improper or inadequate trailering or cradling of the boat.
- Any addition, modification or repair of the boat, or any component thereof, caused by, resulting from or in connection with any party other than Nautique or any defect or product failure caused by, resulting from or in connection with any such addition, modification or repair.
- Weld failures caused by physical impact, improper modifications, or user-induced damage.
- Damage sustained due to a bimini top that is deployed in a manner that is inconsistent with the instructions in the owner’s manual.
- Damage as a result of parasailing.
- Any Nautique boat which has been repossessed or sold through an auction house, third party, or unauthorized dealer.
- Any and all consequential damages including, but not limited to, costs incurred for haul-out, launching, towing, and storage charges, telephone or rental charges of any type, inconveniences, or loss of time or income.

- Any product used for commercial purposes, including, but not limited to rental fleets, demonstrators, competitive racing and other commercial uses.
- The following components that provide their own limited warranties: batteries, engines, propellers, trailers and trailer accessories.

All warranty repairs must be performed in the country of purchase. Warranty will not be honored in cross-international-border purchases.

Boats shipped to certain states might be eligible for additional warranties required by those states' laws, some of which might also impose certain responsibilities on you in order to qualify for them. Nautique may, but is not necessarily required to, deliver to you statements describing these additional warranties and your responsibilities. Please refer to any such additional statements, and your state's laws, for the details, terms, and conditions of these additional warranties and your responsibilities. You are ultimately responsible for identifying and complying with any requirements necessary to qualify for any warranties provided by Nautique. Any defect or damage covered by this warranty shall, at the discretion of Nautique, be repaired free of charge at an authorized dealership or service facility. Repairs will be warranted only for the remainder of the original warranty period. Transportation and/or labor to and from the point of repair will be the responsibility of the owner.

NOTE: *These warranties are expressly conditioned upon the completion of the electronic registration to Nautique. Although not obligated to and without creating such an obligation, this will enable Nautique to notify owners of any necessary performance or safety modifications to your boat, and to verify ownership in case a warranty claim is filed.*

PROCEDURE:

In the event your Nautique boat has a claim covered by this warranty, the following procedure must be followed in order to secure performance of warranty obligations:

- Notify the selling dealer, in writing, within thirty (30) days of the discovery of any claimed defect.
- You may be required to transport the boat, at your expense, to an authorized dealership or service facility for their inspection and/or repair.
- Nautique reserves the right to require further evaluation and/or information regarding a warranty claim against a boat prior to its repair as well as designate the place of repair.

Nautique reserves the right to make changes in prices, color, specifications, equipment, options, materials, hull, decks, and/or discontinue models at any time (without notice), and shall be under no obligation to equip or modify boats built prior to such changes.

Nautique Customer Care, 14700 Aerospace Parkway, Orlando, Florida 32832.
Toll-free number: 1 800-346-2092 or Fax: (407) 851-7844,
email: info@nautique.com.

Effective Model Year 2027 boats

REQUEST FOR TRANSFER OF WARRANTY FOR
(2027) BOAT, ENGINE, and STRUCTURAL

** A COPY OF THE BILL OF SALE MUST BE INCLUDED **

At Nautique Boat Company, Inc.'s ("Nautique's") discretion, the remaining portion of the Nautique "Limited Boat Warranty" (This transfer includes the Limited Structural warranty, which will be ten (10) years from the date of the first owner's purchase) and the PCM "Limited Warranty" for **2027** model boats can be transferred, for a fee, to the second purchaser within five (5) years or one thousand (1000) hours (whichever occurs first) after the first date of delivery of the boat to the original user or purchaser. These limited warranties will be transferred upon the receipt and **VERIFICATION** by Nautique of: (1) a copy of the 2nd purchaser's bill of sale (2) a payment of **$800 for the "Boat, Engine, and Structural Warranty**," payable by check to "Nautique Boat Company" or by credit card via phone call with Nautique directly. These documents **MUST** BE RECEIVED BY NAUTIQUE **WITHIN 30 DAYS** AFTER THE SALE DATE TO THE SECOND PURCHASER; OTHERWISE, THERE SHALL BE NO TRANSFER OF THESE LIMITED WARRANTIES TO THE SECOND PURCHASER. These limited warranties will be transferred retroactive to the sale date. Refer to the warranty policy for details, terms, and conditions of these limited warranties.

ORIGINAL OWNER: _____

BOAT MODEL: _____

HULL ID#: _____ ENGINE SERIAL#: _____

V-DRIVE #:_____ TRANSMISSION#:_____

NEW OWNER INFORMATION:

Please check the box below to acknowledge payment amount and coverage type:

☐ Nautique Boat, Structural and PCM Engine Warranty **($800.00**)

NAME: _____

STREET/P.O. BOX: _____

CITY/STATE/ZIP CODE: _____

DATE PURCHASED: _____/_____/_____ PHONE: _____

ENGINE HOURS: _____ **Provide photo of hour meter**

DEALERSHIP USED FOR SERVICE: _____

EMAIL (FOR CONFIRMATION): _____

SIGNATURE _____

**Please Call (407)-855-4141 for Credit Card Payments (We accept all Credit Cards excluding American Express)

NOTES